SAFETY

WARNING: When using electric tools, always follow basic safety precautions to reduce the risk of fire, electric shock, and personal injury.

READ AND SAVE ALL INSTRUCTIONS FOR FUTURE USE. Before use, be sure everyone using this tool reads and understands this manual as well as any labels packaged with or attached to the tool.

1. KNOW YOUR POWER TOOL. Read this manual carefully to learn your power tool's applications and limitations as well as potential hazards associated with this type of tool.
2. DO NOT ALLOW UNQUALIFIED PEOPLE TO OPERATE the tool.
3. AVOID DANGEROUS ENVIRONMENTS. Do not use your power tool in rain, damp or wet locations, or in the presence of explosive atmospheres (gaseous fumes, dust, or flammable materials). Remove materials or debris that may be ignited by sparks.
4. KEEP WORK AREA CLEAN AND WELL LIT. Cluttered, dark work areas invite accidents. Provide at least 200 watts of lighting at the front work area of the tool. Eliminate all shadows that could interfere with clear viewing of the work area.
5. DRESS PROPERLY. Do not wear loose-fitting clothing or jewelry. Wear a protective hair covering to contain long hair, as it may be caught in moving parts. When working outdoors, wear rubber gloves and insulated, nonskid footwear. Keep hands and gloves away from moving parts.
6. USE SAFETY EQUIPMENT. Everyone in the work area should **wear safety goggles or glasses with side shields** that comply with current safety standards. Wear hearing protection during extended use and a dust mask for dusty operations. Hard hats, face shields, safety shoes, etc. should be used when specified or necessary. Keep a fire extinguisher nearby.
7. KEEP BYSTANDERS AWAY. Keep children and bystanders at a safe distance from the work area to avoid distracting the operator and contacting the tool or extension cord.
8. MAKE THE WORKSHOP CHILD PROOF with padlocks, master switches, etc.
9. NEVER LEAVE THE TOOL RUNNING UNATTENDED. Turn the power off. Do not leave the tool until it comes to a complete stop.
10. PROTECT OTHERS IN THE WORK AREA from debris such as chips and sparks. Provide barriers or shields as needed.
11. SECURE THE WORK. Use a clamp, vise, or other practical means to hold your work securely, freeing both hands to control the tool.
12. USE THE RIGHT TOOL. Do not use a tool or attachment to do a job for which it is not recommended. For example, do not use a circular saw to cut tree limbs or logs. Do not alter the tool, remove guards, or operate the saw when removed from the carriage and frame.
13. USE PROPER ACCESSORIES. Using non-recommended accessories may be hazardous. Be sure accessories are properly installed and maintained. Do not defeat a guard or other safety device when installing an accessory or attachment.
14. CHECK FOR DAMAGED PARTS. Inspect guards and other parts before use. Check for misalignment, binding of moving parts, improper mounting, broken parts, and any other conditions that may affect operation. If abnormal noise or vibration occurs, turn the tool off immediately and have the problem corrected before further use. Do not use a damaged tool. Tag damaged tools "DO NOT USE" until repaired. Repair or replace a damaged guard or other part. For all repairs, insist on identical replacement parts.
15. REMOVE ALL ADJUSTING WRENCHES AND TOOLS from the tool before turning it on. Make this a habit.
16. GROUND YOUR TOOL. See "Electrical Safety," page 7.

17. AVOID ACCIDENTAL STARTING. Be sure your tool is turned off before plugging it in. Do not use the tool if the power switch does not turn it on and off. Observe correct lockout/tag out procedures when performing maintenance on the tool.
18. DO NOT FORCE THE TOOL. Your tool will perform best at the rate for which it was designed. Excessive force only causes operator fatigue, increased wear, increased risk of binding or sudden breakage, and reduced control.
19. KEEP HANDS AWAY FROM ALL CUTTING EDGES AND MOVING PARTS.
20. DO NOT ABUSE THE CORD. Never unplug the cord by yanking it from the outlet. Pull the plug rather than the cord to reduce the risk of damage. Keep the cord away from heat, oil, sharp objects, cutting edges, and moving parts.
21. DO NOT OVERREACH. MAINTAIN CONTROL. Keep proper footing and balance at all times. Maintain a firm grip.
22. STAY ALERT. Watch what you are doing, and use common sense. Do not use a tool when you are tired, distracted, or under the influence of drugs, alcohol, or any medication causing decreased control.
23. UNPLUG THE TOOL when it is not in use, before changing items such as blades, and before performing recommended maintenance. Observe appropriate lockout/tag out procedures.
24. MAINTAIN TOOLS CAREFULLY. Keep handles dry, clean, and free from oil and grease. Keep cutting edges sharp and clean. Follow instructions for lubricating and changing accessories. Periodically inspect tool cords and extension cords for damage. Have damaged parts repaired or replaced.
25. MAINTAIN LABELS AND NAMEPLATES. These carry important information. If unreadable or missing, contact Safety Speed Cut for a free replacement.
26. AVOID KICKBACK. Kickback is a violent reaction to a pinched or binding saw blade. It throws the saw upward when crosscutting and throws the work piece out when ripping. Firm control, proper support of the work piece, and concentration on the job are essential to reduce the risk of injury from kickback:
    a. KEEP SAW BLADE CLEAN AND SHARP. A dull or improperly sharpened blade produces a narrow kerf and is likely to be pinched by the work piece. Any blade with a small set, even though sharp, may be likely to kick back. A dull blade encourages you to force the saw, causing reduced control and blade binding. The excessive friction generated can cause the blade to warp or bind. Use only blades that are recommended for use with your tool. Do not use blades with mounting holes that are not the correct size or shape. Never use defective or incorrect blade washers or bolts. Be sure the blade bolt is tight. Select the proper blade for the application. Blade speed specifications must be at least as high as the nameplate RPM.
    b. DO NOT FORCE THE TOOL. Let the saw do the work. A saw is more easily controlled and will do a better job when used in the manner for which it was designed.
    c. SECURE WORK PROPERLY. If a piece is supported on both sides of the cut in such a way that it allows the material to bow and pinch the blade, it may produce kickback. Do not cut pieces smaller than the saw carriage. Support large panels properly.
    d. IF THE BLADE BINDS, the saw or work piece may kick back. Keep hands, body, and bystanders out of the path of the blade and material.
    e. STAY ALERT. Watch what you are doing and use common sense. Do not allow yourself to be distracted. Do not operate the tool when you are tired or under the influence of drugs or alcohol. Hold the tool and material firmly and exercise control at all times. Position yourself and co-workers out of the kickback path. Repetitive cuts that lull you into careless movements can also cause kickback. A brief “stretch” may be all that is necessary to avoid a problem.
    f. RESTARTING IN MID-CUT. If the saw is stopped in mid-cut, allow the blade to stop. Then back up the saw (if crosscutting) or the board (if rip cutting) before restarting.
    g. IF THE BLADE STALLS, DO NOT TURN THE SWITCH ON AND OFF. A dull blade or excess pressure may cause stalling. Release the switch immediately if the blade binds or the saw stalls, and remove the saw from the cut.
    h. AVOID CUTTING NAILS OR OTHER FASTENERS. Inspect for and remove all metal fasteners before cutting.

i. SUPPORT THIN MATERIAL. Large sheets such as paneling, Formica, etc., tend to warp or sag and must be well supported over their entire length to avoid pinching the blade.

27. HANDLE THE COUNTERBALANCE WITH CARE. The counterbalance cable is under tension. Always attach the cable to the saw carriage before removing the cable clip. Do not pull on the cable by hand or attempt to disassemble or repair the counterbalance. Replacement counterbalances can be purchased directly from Safety Speed Cut.
28. DO NOT USE PUSH STICKS.
29. CROSSCUTTING (VERTICAL CUTTING) MUST ALWAYS BE DONE FROM THE TOP DOWN. Raise the saw carriage to the uppermost position on the guides and lock it into position with the carriage lock whenever the tool is not in use. See “Operating Procedure: Crosscutting”, for more information.
30. RIPPING (HORIZONTAL CUTTING) MUST ALWAYS BE DONE WITH THE DIRECTION OF THE ARROW. Raise the saw carriage to the top of the guides and lock it into position with the carriage lock whenever the tool is not in use. See “Operating Procedure: Rip cutting”, for more information.
31. ALWAYS WAIT FOR THE BLADE TO STOP COMPLETELY BEFORE CHANGING POSITIONS. Unplug the tool before transporting or moving it.
32. DO NOT PLACE YOUR HANDS ON OR UNDER THE SAW CARRIAGE OR IN THE PATH OF THE BLADE. Do not try to retrieve a piece of cut material while the blade is rotating. This symbol is to remind you:

33. DO NOT DEFEAT THE GUARDS OR OPERATE THE TOOL WITHOUT THE GUARDS IN PLACE. Do not remove the saw motor from the carriage.
34. NEVER STAND ON THE TOOL. Serious injury could occur if the tool is tipped or if you unintentionally contact the cutting tool.
35. DIRECTION OF FEED. Always feed work into the blade or cutter against the direction of the rotation of the blade or cutter.
36. DISCONNECT AND LOCK THE POWER OFF before changing saw blades or making any adjustments.
37. KEEP THE CARRIAGE LOCK SECURELY TIGHTENED when the machine is not in use.
38. REFER TO PAGE 42 FOR WARNING LABEL IDENTIFICATION.

Please Read Before Operating the Saw

WARNING! Some dust created by power sanding, sawing, grinding, drilling, and other construction activities contains chemicals known to cause cancer, birth defects or other reproductive harm. Some examples of these chemicals are:

- Lead from lead-based paint
- Crystalline silica from bricks and cement and other masonry products, and
- Arsenic and chromium from chemically treated lumber.

Your risk from these exposures varies, depending on how often you do this type of work. To reduce your exposure to these chemicals: work in a well ventilated area, and work with approved safety equipment, such as those dust masks that are specifically designed to filter out microscopic particles.

Electrical Safety

WARNING: Improperly connecting the grounding wire can result in the risk of electric shock. Check with a qualified electrician if you are not sure that the outlet is properly grounded. Do not modify the plug provided with the tool. Never remove the grounding prong from the plug. Do not use the tool if the cord or plug is damaged. If damaged, have it repaired by a qualified electrician before use. If the plug will not fit the outlet, have a proper outlet installed by a qualified electrician.

Some of our machines are equipped with a polarized plug (one blade is wider than the other). This plug will fit in a polarized outlet only one way. If the plug does not fit fully in the outlet, reverse the plug. If it still does not fit, contact a qualified electrician to install a polarized outlet. Do not change the plug in any way. Double insulation eliminates the need for the three wire grounded power supply system mentioned above.

Do not expose your tool to rain or wet conditions. Water entering a power tool will increase the risk of electric shock.

The plug must be connected to a properly grounded outlet (see Figure 1). If the tool should electrically malfunction or break down, grounding provides a low-resistance path to carry electricity away from you, reducing the risk of electric shock.

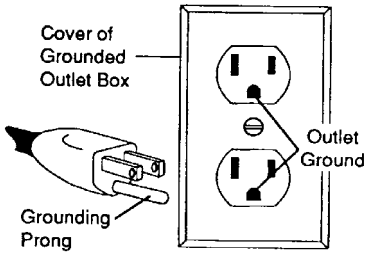

Figure 1: Grounded Plug and Outlet

The grounding prong on the plug is connected through the green wire inside the cord to the grounding system in the tool. The green wire in the cord must be the only wire connected to the tool's grounding system and must never be attached to an electrically "live" terminal.

Your tool must be plugged into an appropriate outlet, properly installed and grounded in accordance with all codes and ordinances. The plug and outlet should look like those in Figure 1.

Figure 2 illustrates a temporary adapter available for connecting grounded plugs (Figure 1) to two-prong outlets. The green rigid ear or lug extending from the adapter must be connected to a permanent ground such as a properly grounded outlet box or receptacle. Simply remove the center screw from the outlet, insert the adapter and reattach the screw through the green grounding ear to the outlet. If in doubt of proper grounding, call a qualified electrician. A temporary adapter should only be used until a qualified electrician can install a properly grounded outlet. The Canadian Electrical Code prohibits the use of temporary adapters.

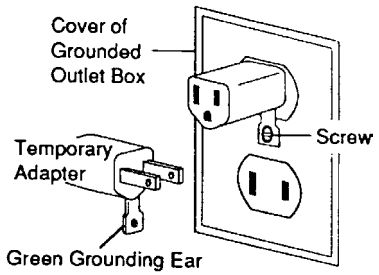

Figure 2: Temporary Grounding Adapter

Extension Cords

Grounded tools require a three-wire extension cord. As the distance from the supply outlet increases, you must use a heavier-gauge extension cord. Using extension cords with inadequately sized wire causes a serious drop in voltage, resulting in loss of power and possible tool damage. Refer to Table I below to determine the required minimum wire size.

Table I: Recommended Minimum Wire Gauge for Extension Cords

	Extension Cord Length *					
Nameplate Amps	**25'(7.6m)**	**50'(15m)**	**75'(23m)**	**100'(31m)**	**150'(46m)**	**200'(61m)**
< 5	16	16	16	14	12	12
5 - 8	16	16	14	12	10	—
8 - 12	14	14	12	10	—	—
12 - 15	12	12	10	10	—	—
15 - 20	10	10	10	—	—	—

***** based on limiting the line voltage drop to 5V at 150% of the rated amperes.

The smaller the gauge number of the wire, the greater the capacity of the cord. For example, a 14-gauge cord can carry a higher current than a 16-gauge cord. When using more than one extension cord to make up the total length, be sure each cord contains at least the minimum wire size required. If you are using one extension cord for more than one tool, add their nameplate amperes and use the sum to determine the required minimum wire size.

Guidelines for Using Extension Cords

If you are using an extension cord outdoors, be sure it is marked with the suffix "W-A" ("W" in Canada) to indicate that it is acceptable for outdoor use.

Be sure your extension cord is properly wired and in good electrical condition. Always replace a damaged extension cord or have it repaired by a qualified person before using it.

Protect extension cords from sharp objects, excessive heat, and damp or wet areas.

Short-Circuit Protection

This tool must only be plugged into a circuit that has a short-circuit protection device which is located ahead of the equipment in the circuit, in accordance with local codes.

General guidelines are as follows:

120 volt: 20 amp protection

These models can include: C4, C5, H-series, 6400/6800, 3400, TR-2, SR5, SR5U

220 volt: 10 amp protection

These models can include: C4, C5, H-series, 6400/6800, 3400, TR-2, SR5, SR5U

Reference your motor label and your local codes before installation.

READ AND SAVE ALL INSTRUCTIONS FOR FUTURE REFERENCE.

INSTALLATION

Your Safety Speed Cut saw or router comes from the factory assembled and aligned. You will only have to mount the following parts before you can run this tool:

- Counterbalance (on Models C4, C5, H-Series, and SR5)
- Motor (except for Models 6400/6800, 7400/7400XL, and the SR5/SR5U)
- Cord keeper (except for Models 7400 and 7400XL).

If you have ordered a Frame Stand, Frame Wheels, Dust Collector, or other accessories, you will find assembly instructions packed with them (and repeated at the end of this manual).

Tools Required for Installation

NOTE: Additional tools may be required for installing accessories.

- 7/16" wrench
- 9/16" wrench (for Frame Stand Accessory)
- 5/8" wrench
- 3/4" wrench (for Frame Wheels Accessory)
- 9/16" blade wrench (provided)

Operating Environment

For safe operation, install the tool in an area that is well lit. Eliminate all shadows that could interfere with clear viewing of the work area.

Do not locate the tool in a damp or wet location, or a location where it may be exposed to rain.

If the tool will be operated in an enclosed area, SSC recommends installing a Dust Collection System (see pg 34).

Avoid explosive atmospheres (gaseous fumes, dust, or flammable materials).

Secure the area so that children and bystanders are kept a safe distance from the work area. Provide barriers and shields as needed.

NOTE: The average noise level of SSC saws and routers is less than 80 dB.

Unpacking

1. Remove all the plastic sheeting, protective cardboard, and wood crating.
2. One or more boxes of parts are attached to the frame. The cord keeper is taped to the carriage. Remove these items for later installation.

Machine Assembly

Installing the Counterbalance (if required-C4, C5, H-series, and SR5)

WARNING: To reduce the risk of injury or damage to components, do not attempt to disassemble or repair the counterbalance. Do not pull on the counterbalance cable. The cable is under strong spring force: the unit must be properly assembled before you remove the cable clip.

A counterbalance is used on Models C4, C5, H-Series, and SR5, to offset the weight of the carriage and saw or router. Other models use a counterweight system that is factory installed.

The counterbalance is shipped with the necessary hardware attached, and is in the box marked “Saw Motor.” Remove the two 1/4-20 x 1/2” carriage bolts, nuts, and washers from the counterbalance. Do not remove the bolt and nut that are on the counterbalance cable.

1. Pull the end of the cable from the inside of the counterbalance. Set the counterbalance on top of the tool frame, slightly off-center to either the left or right, so that the cable is aligned vertically with an oval hole near the top of the carriage. See Figure 3. Some model tools have two oval holes in the carriage, one off-center each way; other models have only a single hole. **(Do not mount the counter balance in the center holes)**
2. Secure the counterbalance to the top of the tool frame, using the two attached carriage bolts, washers, and nuts. Tighten the nuts securely.

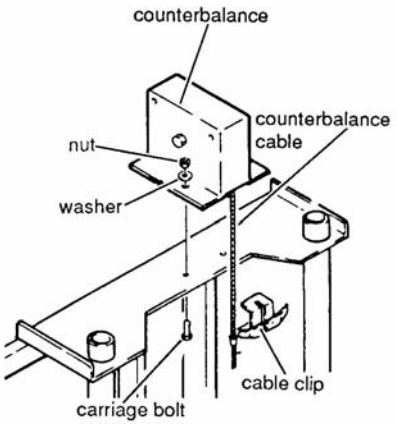

Figure 3: Installing the Counterbalance

3. Hold the carriage securely while you loosen the red carriage lock (Figure 13 through Figure 18). Raise the carriage until the hole in the top of the carriage aligns with the eye in the end of the counterbalance cable, making sure the cable is **behind** the carriage. Then lock the carriage rip lock.
4. Hold the cable end behind the carriage. Remove the carriage bolt and nut, and use them to attach the end of the counterbalance cable end to the oval hole in the carriage. Tighten securely.
5. Bend the cable clip tabs forward by hand, so they look like the ones in Figure 4.

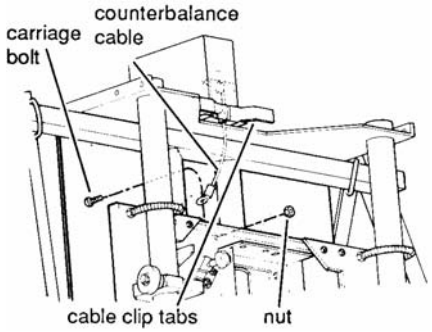

Figure 4: Attaching the Counterbalance Cable

6. Loosen the carriage lock and lower the carriage until the cable clip is fully exposed, then lock the carriage rip lock. Remove the cable clip from the counterbalance cable and save it for future use (e.g., if you remove the counterbalance in the future, you will need the cable clip to support the tension in the counterbalance).

Standing Up the Tool

With the help of an assistant, stand up the tool and position it in its intended operating location:

- If the tool is to be mounted to the floor, or to a wall or post, it must be attached securely to avoid injury from tipping.

- If you have purchased the optional Frame Stand, install it now. Follow the mounting instructions packed with the Stand (and repeated at the end of this manual). The Stand will correctly support the Tool under normal operating conditions.

WARNING: A freestanding saw must be located away from areas where it could be accidentally tipped over.

Mounting the Motor on the Carriage (Saws)

Models C4, C5, H4, H5, H6

The saw motor is inside the box marked "Saw Motor". It is shipped with two washers, three nuts, and one bolt installed. Remove these items to mount the saw to the turntable on the carriage.

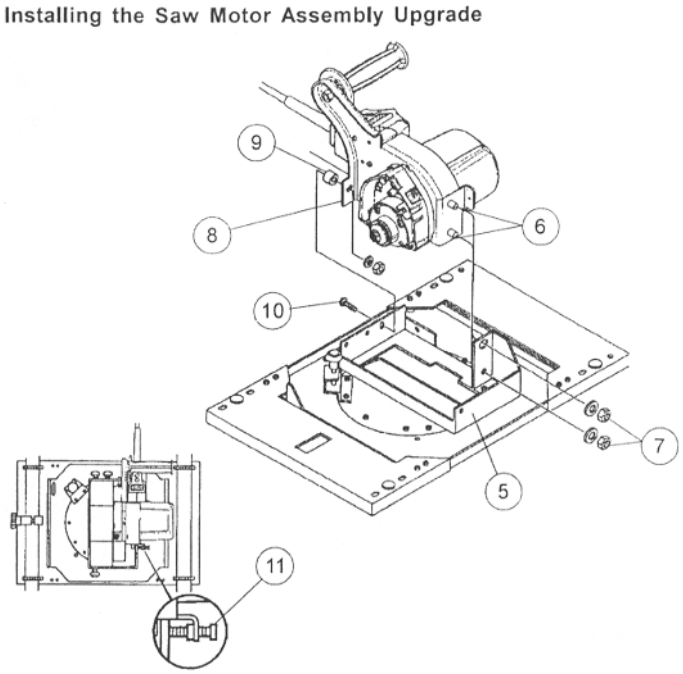

Figure 5: Mounting the Saw Motor (Models C4, C5, H4, H5, H6)

1. Loosen the carriage rip lock and lower the carriage to a comfortable working height. Then tighten the carriage rip lock securely.
2. Mount the motor to the carriage by inserting the studs (6) on the saw motor through the holes in the turntable (5). See Figure 5. Install the washers and nuts (7), and hand-tighten only.
3. The bracket (8) that extends from the saw handle has a single hole. Place the spacer (9) between the bracket on the base and the bracket on the saw handle. Align that hole with the hole in the turntable as shown in Figure 5, and insert the bolt (10). Install the nut, and hand-tighten only.
4. Make sure the screw (11) on the saw motor plate is flush against the turntable bracket as shown, to ensure the saw is square. This screw (11) is factory-set and does not require adjustment when the tool is being installed.
5. Tighten the **two bottom nuts first (7)**, and the top nut (10) last.

Models 6400, 6800

The Models 6400 and 6800 are shipped with the saw motor already mounted.

Models 7400, 7400XL

The Models 7400 and 7400XL are shipped with the saw motor already mounted.

Mounting the Router Platform and Saw Platform on the Carriage (Combination Machines)

Models SR5 and SR5U

1. Set the bottom of the router or saw platform behind the two clips at the bottom of the carriage.
2. Pivot the top of the platform into the carriage so its hole slips over the locating pin.
3. Attach the top of the platform to the carriage with two red thumbscrews.

Models 3400 and TR2

Remove the router motor from the box and screw it into the factory mounted router base on the lifting platform.

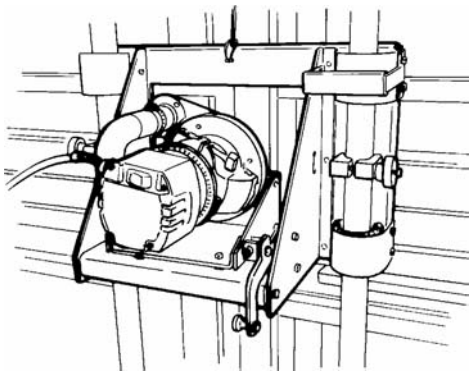

Figure 6: Mounting the Router and Platform (Model 3400 shown)

Installing a Blade (Saws)

1. Select the correct blade for your needs. Refer to “Selecting a Blade”.

   IMPORTANT: Because the saw blade must be carefully matched to the materials being cut, Safety Speed Cut does **not** supply a blade as standard equipment on the saw. Improper blade selection can result in reduced tool life, inaccurate and poor quality cuts, and safety risks. Consult with your machinery dealer, or with our customer service department (800-772-2327) to determine the best blade for your cutting needs.

2. Tighten your rip lock on your carriage. While holding the in the spindle lock (16)(located on the bottom side of your motor) **remove the blade bolt** (12)(Figure 7) from the saw motor spindle by turning it **counterclockwise**. Remove the outer blade flange (13), but leave the inner blade flange (14) on the spindle.

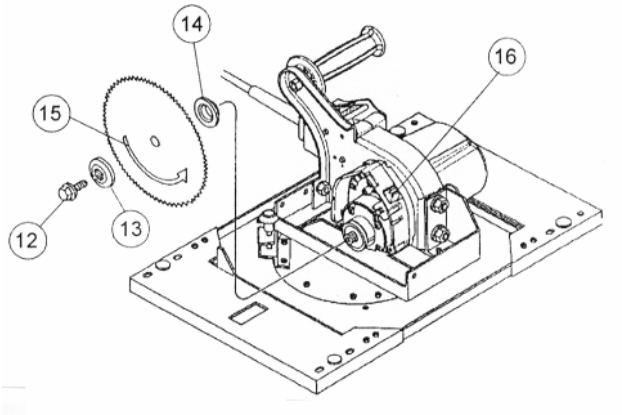

Figure 7: Installing a Saw Blade (H Series Shown)

3. Install the blade with the arrow pointing counterclockwise as shown (15).
4. Reinstall the outer blade flange (13) and hand-tighten the arbor bolt (12). To keep the spindle from turning while you tighten the bolt hold in the spindle lock button (16).

   Use the special set of wrenches provided with the tool to **securely tighten the bolt clockwise**.

5. Loosen the carriage lock and allow the saw carriage to return to the top of the guides.

WARNING: To reduce the risk of injury, do not operate the tool without the blade guard in place.

Installing the Blade Guard (Saws)

NOTE: The Models 7400 and 7400XL do not have a separate blade guard.

The blade guard (Figure 8 or Figure 9) is in the box marked "Saw Motor." Always install the blade guard before operating the saw. The guard is shipped with two or three red torque knobs (22) installed, depending on the model. Remove the knobs to install the guard. Be sure to leave the rubber washers on the torque knobs, because they prevent the knobs from slipping.

Attach the guard to the carriage by reinstalling the torque knobs as shown (21).

Return the carriage to the top of the guide tubes and tighten the carriage lock.

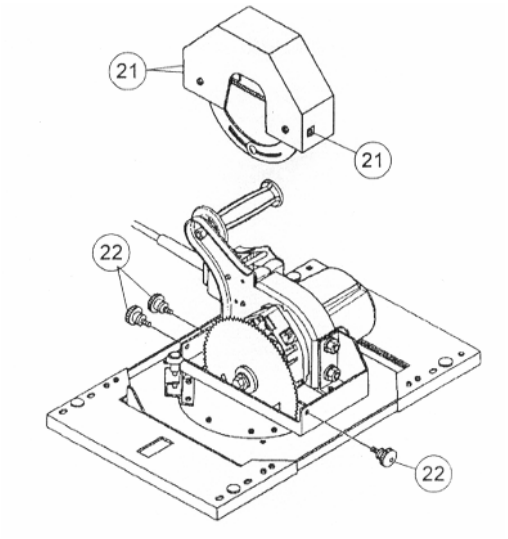

Figure 8: Installing the Blade Guard (Models C4, C5, H4, H5, H6)

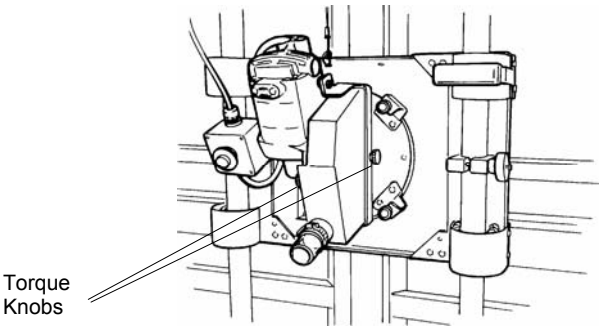

Figure 9: Installing the Blade Guard (Models 6400, 6800)

Installing a Bit (Routers)

1. **Disconnect power to the unit.**
2. Lock the carriage lock.
3. Loosen the wing nut on the router base.
4. Rotate the motor counterclockwise, and remove it.
5. Using the wrench kit provided, loosen the collet and remove the bit.
6. Install the new bit and tighten the collet securely.

Adjusting the Crosscut Rulers (Saws)

The saw has one rip ruler mounted vertically, and two crosscut rulers, one attached to the frame on each side of the saw. The rip ruler is set at the factory, but the two crosscut rulers must be adjusted to the specific blade that is mounted in the saw. Install a blade, then refer to "Adjusting the Crosscut Rulers" in the Operation Section.

NOTE: After the saw is completely assembled, you can make a simple cut to verify that the rulers are lined up correctly.

Installing the Cord Keeper

The cord keeper keeps the cord away from the blade or bit and away from your work piece. (The Models 7400 and 7400XL have an integral cord keeper.)

1. Pinch the ends of the cord keeper together as shown in Figure 10 while you slowly slide the ends into the guide tubes. Seat the ends securely.

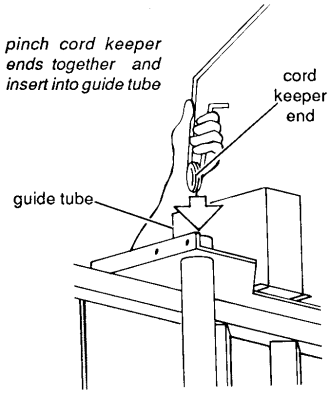

Figure 10: Installing the Cord Keeper

2. Remove the rubber stopper from the ring in the cord keeper. See Figure 11. Uncoil the cord from the motor, and place the plug end through the ring as shown.
3. Loosen the carriage lock and lower the carriage to the **bottom** of the guide tubes (the farthest that the cord will have to be extended). Lock the carriage lock in this lowered position.
4. Pull the cord keeper down so it is roughly parallel to the floor as shown. Pull the cord up to remove any slack in it. Then open the rubber stopper and pull it over the cord with the small end of the taper on the bottom. Press the rubber stopper into the ring on the cord holder.

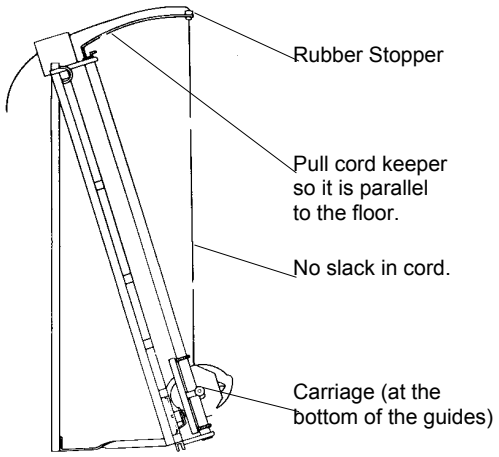

Figure 11: Installing the Cord Keeper

5. Loosen the carriage lock. Allow the carriage to return to the top of the guide tubes and then lock the carriage lock.

NOTE: If you discover there is too much or not enough slack in the cord, readjust as necessary.

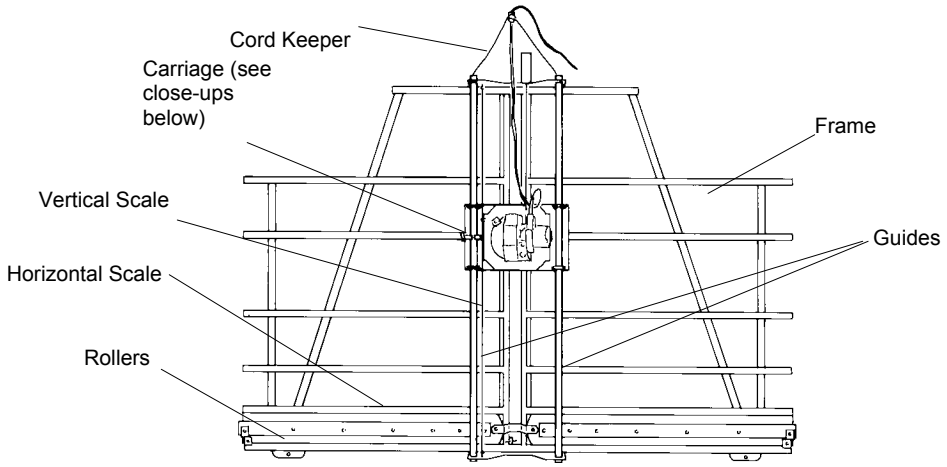

Figure 12: Main Components of Saw or Router (Model H-5 Saw Shown)

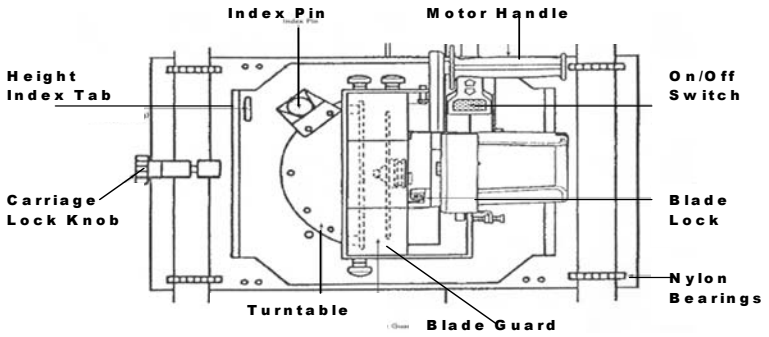

Figure 13: Carriage (Models C4, C5, H4, H5, and H6 Saws)

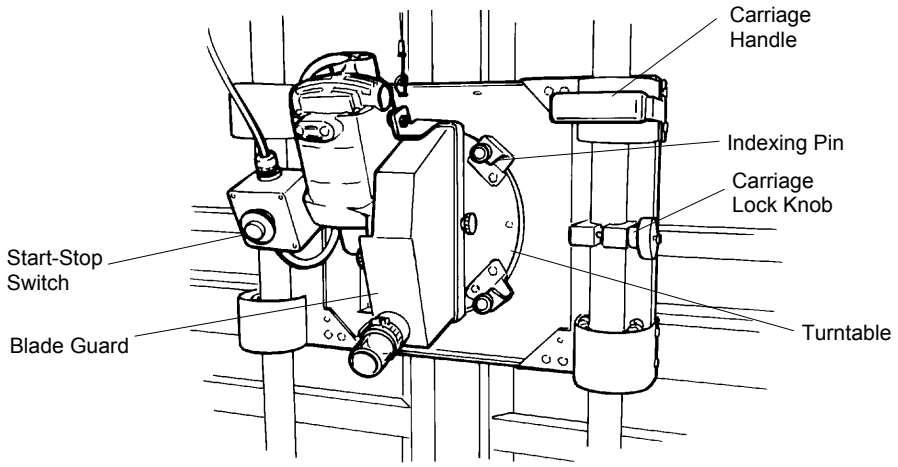

Figure 14: Carriage (Models 6400 and 6800 Saws)

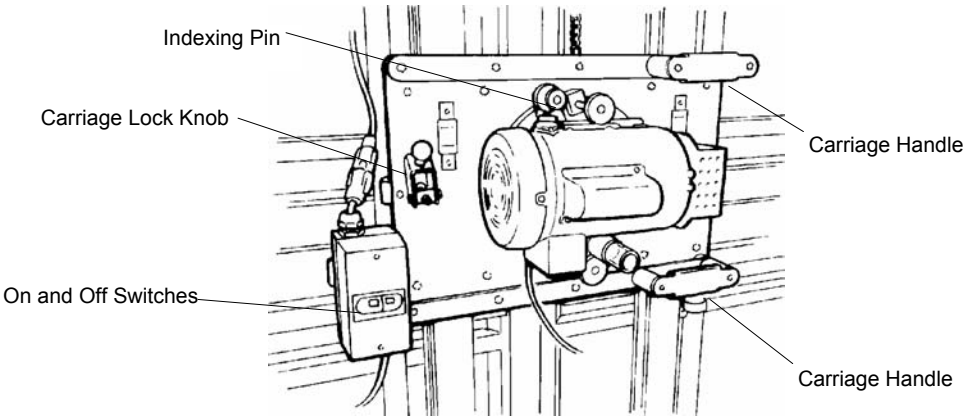

Figure 15: Carriage (Models 7400 and 7400XL Saws)

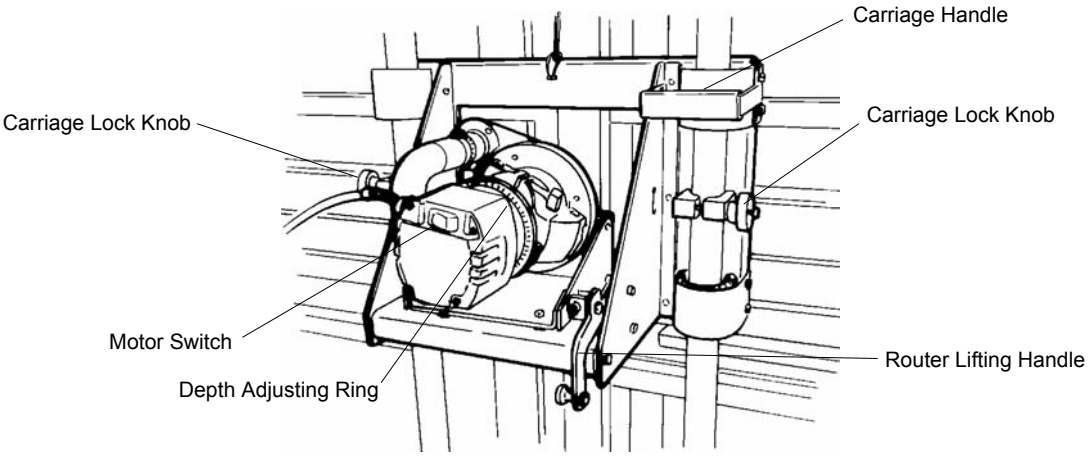

Figure 16: Carriage (Models 3400 and SR5U Routers)

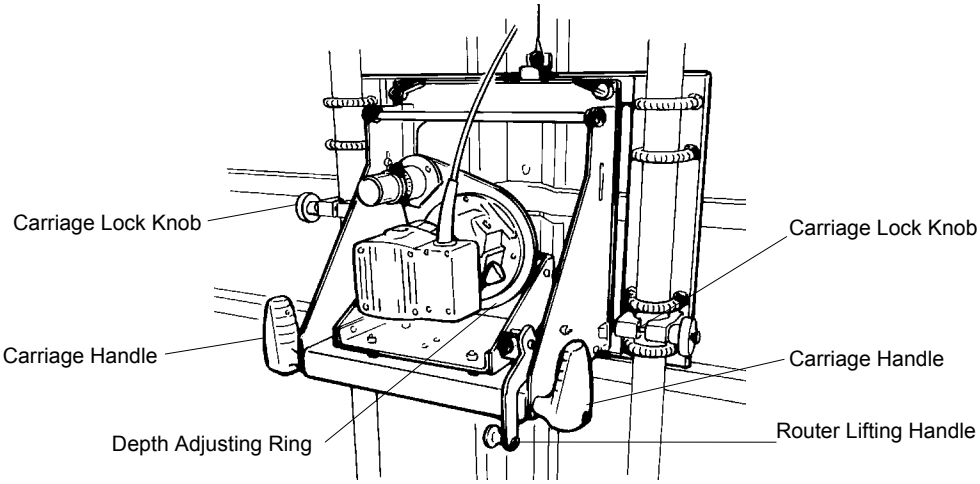

Figure 17: Carriage (Model SR5 Router)

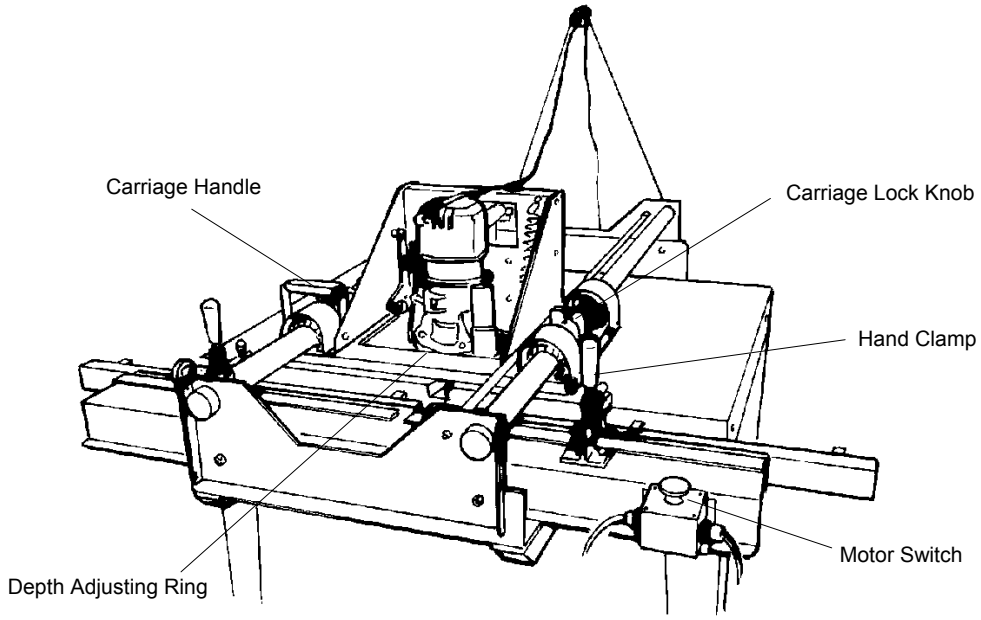

Figure 18: Model TR2 Router

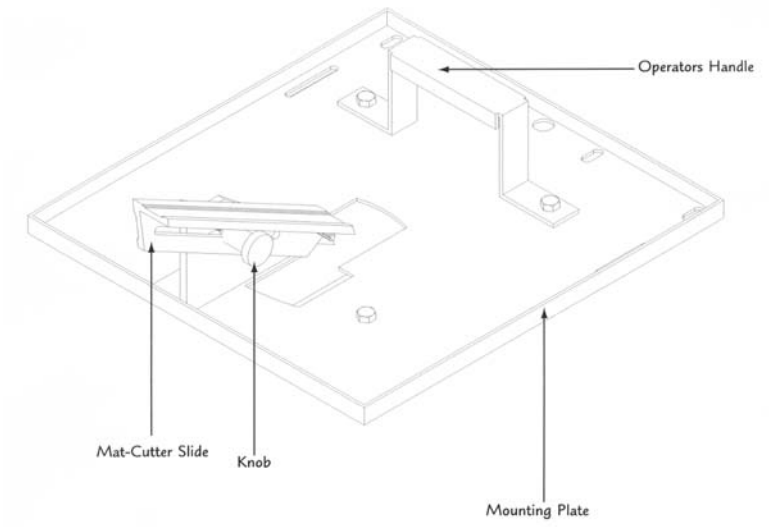

Figure 18A: Knife Carriage

OPERATION

WARNING: The following are suggestions that give you a general idea of how a panel saw or router is intended to be operated. No instructions can replace common sense and experience. Be sure you and all operators have enough time and material to become familiar with the general operating characteristics of this tool, and have FULLY READ AND UNDERSTOOD all general operating and safety instructions.

Limitations of the Tool

Small Work pieces

SSC saws and routers are not recommended for work pieces that are smaller than the carriage. **Do not cut pieces that are so small that your hand must be behind the carriage to hold the piece in place.** Use a tool better suited to these applications, such as a table saw, radial arm saw, or band saw.

Work piece Height (Crosscutting)

SSC tools are limited in crosscut capacity as shown in Table II below.

Table II: Maximum Work piece Height for Crosscutting

Model	Max. Height
C4	50 in.(1270mm)
H4	50 in.(1270mm)
C5/H5	64 in.(1625mm)
H6	73 in.(1850mm)
6400	64 in.(1625mm)
6800	73 in.(1850mm)
7400	64 in.(1625mm)
7400XL	64 in.(1625mm)
SR5	62 in.(1575mm)
3400	62 in.(1575mm)
TR2	36 in.(910mm)

Work piece Thickness

Maximum thickness of a work piece to be cut with SSC saws and routers is:

- 2 ¼” (55mm) on the Models 7400 and 7400XL
- 1-3/4” (45mm) on other models.

SSC recommends using the optional Hold-Down Bar for frequent cutting of materials thinner than ¾”(19mm).

Crosscutting Limitations

When crosscutting (vertical cuts), the work piece must be supported on at least two rollers (Figure 24) for safe operation and accurate cutting. When you use the optional Midway Fence, the work piece must extend at least 4” (26.6mm) beyond the carriage on both sides (see Figure 25).

Do not crosscut work pieces that extend more than 5 feet (1.5m) beyond the outermost roller (on a Model C4 or C5 more than 2 feet (.6m) beyond). To increase available capacity for these larger panels, SSC recommends using the optional Frame Extensions (Figure 38).

Rip cutting Limitations

The minimum length recommended for rip (horizontal) cuts is 2-1/2 feet (.79M), so the work piece will be supported on at least four rollers. Pieces shorter than 4 feet (1.22m) can be rotated 90° and be crosscut. This size limitation also applies when using the optional Midway Fence. See Figure 26 and 27.

Do not attempt to rip cut boards longer than 6 feet on the Model C4 or C5 (8 feet with the optional Frame Extensions, Figure 28). On all other models, there is no limit to the length of board that can be rip cut. However, you must insure that the board is properly supported at all times. For regular rip cutting of long pieces, SSC recommends using optional Frame Extensions, or the extended-frame Model 7400XL.

Selecting a Saw Blade

The saw blade must be carefully matched to the materials being cut. Improper blade selection can result in reduced tool life, inaccurate and poor quality cuts, and safety risks. The following table lists some recommended blades for certain applications.

If in doubt, consult with your machinery dealer, or with our customer service department (800-772-2327), to determine the best blade for your cutting needs.

Table III: Recommended SSC Blades for Certain Applications

Material	8200HG	848ATB	848ATBL	860ATB	860NRATB	860NRTCG	860TCG	860TCGS	880ATBL	880TCGL
Alucabond						X	X	X		
Aluminum plate						X				
Chipboard		X	X	X			X		X	
Double-face panels			X		X	X			X	
Duraply							X			X
Gatorfoam								X	X	
Hardwood		X	X	X					X	
Laminated panels		X	X						X	
Masonite		X	X				X		X	
Melamine					X	X				X
Particle board		X	X				X	X	X	
Plexiglas up to 1/2”							X	X		
Plywood		X	X	X				X	X	
Polycarb. (Lexan)	X							X		
Polyester					X	X				X
Printed grain lamin.					X					X
Solid wood		X	X	X				X	X	
Veneer			X		X				X	
Vinyl					X	X			X	

Always keep blades clean and sharp for the best performance. A dull or dirty blade can bind and pinch, resulting in kickback and poor quality cuts. **If in doubt, replace it with a new blade.**

The blade diameters specified for SSC panel saws are 8” (200mm), with an arbor of 5/8” (16mm). Minimum blade kerf for the saw blade is .10”(2.5mm). Riving knife thickness is .08(1.98mm), blades that are thinner than this kerf should not be used. Only blades made in conformity to EN847-1:1997 should be used on this machine.

Basic Operating Functions

Refer to Figure 12 through Figure 18 for the location of operator controls on each model saw and router.

Changing the Blade (Saws) -- Unplug the saw

1. Observe appropriate lockout/tag out procedures to insure the tool cannot accidentally be powered.
2. On all models except the 7400 Series, remove the top blade guard (see 21 below).
3. To keep the spindle from turning while you loosen the arbor bolt (12) push the spindle lock (16) located on the under side of the saw motor. Then tighten the carriage lock.

4. Use the allen wrench provided with the saw to loosen and remove the bolt (Figure 19) counterclockwise (C4, C5, H-Series) clockwise (6400/6800).
5. Remove the outer blade flange (13), blade (15), and inner blade flange (14).
6. Clean the spindle, flanges, bolt, and blade to remove built-up dust and debris.
7. Reinstall the inner flange, slide on the **new blade with the arrow pointing counterclockwise (C4, C5, H-Series)**, clockwise (6400/6800) reinstall the outer blade flange, and **hand-tighten the bolt clockwise**.
8. Use the allen wrench to tighten the bolt while pushing the spindle lock.
9. Reinstall the blade guard.
10. Loosen the carriage lock and allow the saw carriage to return to the top of the guides.
11. Reconnect the power.

NOTE: You may have to readjust the rip and crosscut rulers after changing blades or installing a re-sharpened blade. See “Adjusting the Crosscut Rulers”.

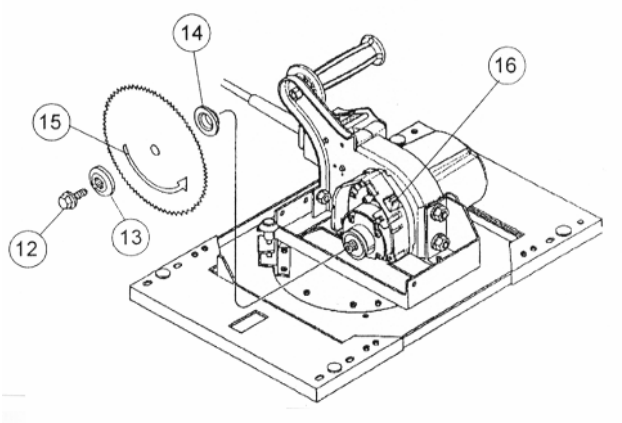

Figure 19: Installing a Saw Blade (H Series Shown)

Removing and Installing the Blade Guard (Saws)

NOTE: The Model 7400 and 7400XL do not have a separate top blade guard. The blade is removed from the backside of the saw with the two blade wrenches provided.

The blade guard is attached to the carriage with the red torque knobs (22), Figure 20 or Figure 21. Remove the torque knobs to remove the guard. Be sure to leave the rubber washers on the torque knobs because they prevent the knobs from slipping.

Always install the blade guard before operating the saw (21).

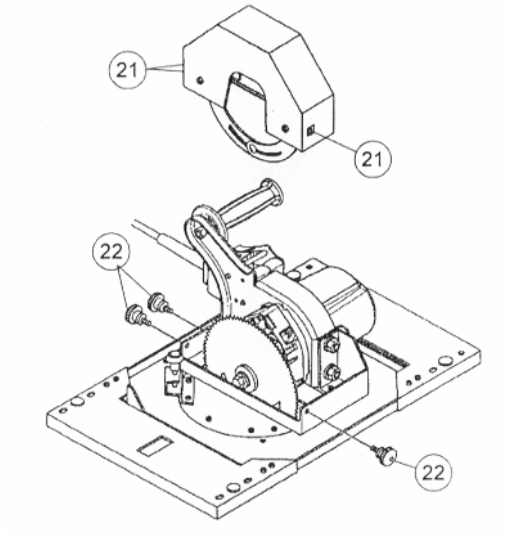

Figure 20: Installing the Blade Guard (Models C4, C5, H4, H5, H6)

Changing the Bit (Routers)

1. **Disconnect power to the unit.**
2. Lock the carriage lock.
3. Loosen the wing nut on the router base.
4. Rotate the motor counterclockwise and remove it.
5. Using the wrench kit provided, loosen the collet and remove the bit.
6. Install the new bit and tighten the collet securely.

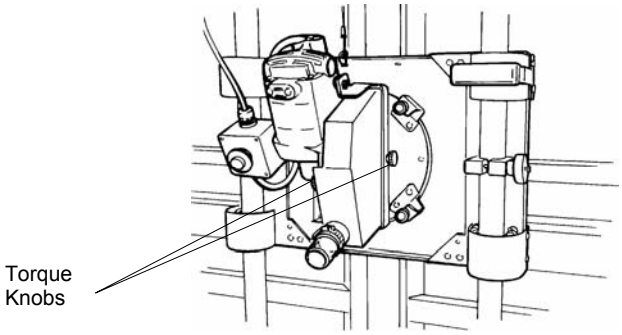

Figure 21: Installing the Blade Guard (Models 6400, 6800)

Starting and Stopping the Motor

C4, C5, SR5, and H-Series saws. Start the motor by lifting on the paddle switch located under the saw handle. Stop the motor by pressing the same switch down.

Models 6400, 6800, and SR5U saws. Start the motor by pulling the start-stop switch out. Stop the motor by pressing the same switch in.

Models 7400 and 7400XL saws. Start the motor by pushing the black button ON. Stop the motor by pressing the red button OFF.

Models SR5, SR5U, and 3400 routers have a switch on the front of the router motor. Press ON or OFF as required.

TR2 routers. Start the motor by pulling the start-stop switch out. Stop the motor by pressing the same switch in.

Rotating the Turntable on the Carriage

C4, C5, and H-Series saws; Models SR5 and SR5U routers. Pull out both of the indexing pins, and pivot the turntable until they snap into the appropriate holes.

Models 6400 and 6800 saws. Pull out both indexing pins, and pivot the turntable until they snap into the appropriate holes.

Models 7400 and 7400XL saws. Unscrew the indexing pin, and pivot the turntable until the pin is aligned with the appropriate hole. Screw the indexing pin into the new hole and then tighten the pin's locking knob.

Model 3400 and TR2 router. The Model 3400 are routers only, and do not have turntables.

Moving the Carriage Up or Down

C4, C5, and H-Series saws. Use the handle attached to the motor body.

Models 6400 and 6800 saws. Use the handle in front of the right guide tube, attached to the carriage in the far upper right hand corner.

Models 7400 and 7400XL saws. Use the blue handles on the right hand side of the motor.

Models SR5 and SR5U routers. Use the handle on the upper right hand corner of the carriage.

3400 and TR2 routers. Use the handle in front of the right guide tube.

Locking the Carriage

Lock the carriage by tightening the red lock knob(s):

- **On the C4, C5, and H-Series saws**, located on the left guide tube.
- **On Models 6400 and 6800 saws**, located on the right guide tube.
- **On Models 7400 and 7400XL saws**, located to the left of the motor.
- **On routers**, one lock knob located on each guide tube.

Adjusting the Crosscut Rulers (Saws)

The saw has one rip ruler mounted vertically, and two crosscut rulers, one attached to the frame on each side of the saw. The rip ruler is set at the factory, but the two crosscut rulers must be adjusted to the specific blade that is mounted in the saw. Be sure the blade is installed before following these steps:

1. Remove the blade guard (18) so the blade is exposed.
2. Loosen the carriage lock and lower the carriage as shown in Figure .

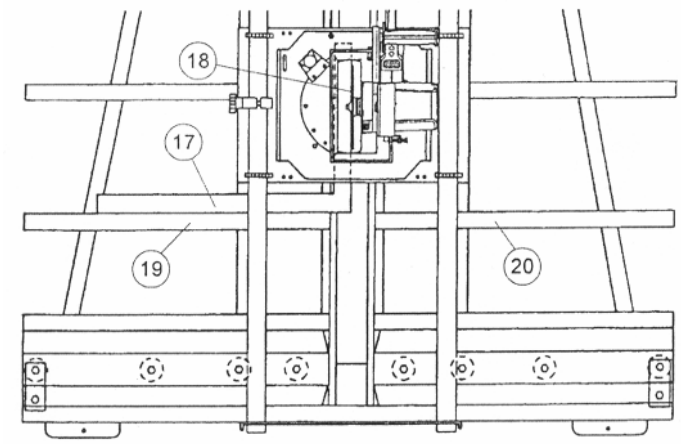

Figure 22: Adjusting the Crosscut Rulers

3. Use a square (17) that measures at least 14" (356mm) on one side. Line up one edge of the square with the tips of the saw blade, and the other edge of the square with the crosscut (horizontal) ruler. Slide the ruler (19) so that its measure matches the measure on the square. A magnet holds the ruler in place, but you may wrap clear tape around the ruler and frame for additional hold, if required.
4. Repeat the above steps to adjust the crosscut ruler on the other side (20) of the tool.
5. Make a simple cut to verify that the ruler is lined up correctly.

Adjusting the Material Thickness Control (Routers)

Adjust the control knob and spindle (on the back of the lifting platform) so the beveled router sub-base stops 1/8" below the surface of the material being dadoed. **Failure to make this adjustment will ultimately result in unnecessary damage to the router platform and/or an inconsistent depth of cutting.**

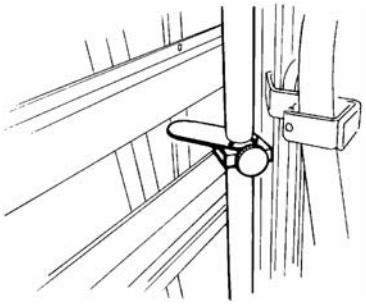

Figure 23: Kerf Spreader (7400 Series)

Adjusting the Kerf Spreader (Models 7400 and 7400XL)

The 7400-Series saws have a kerf spreader (Figure 23) mounted on a vertical tube to the left of the saw carriage tracks. It is intended to run in the cutout kerf from the saw cut when making horizontal cuts from the right to the left. The spreader keeps the upper part of the panel from sagging down and binding on the saw blade.

Adjust the spreader to the vertical position where the saw blade is running, and tighten it in place with the red hand knob. When not being used, move the spreader to the top of the saw.

Using the Knife Scoring System (Models 7400 and 7400XL)

An accessory for the 7400-Series saws includes twin carbide knives that produce score marks directly in line with the main saw blade. The score marks are easily adjusted to match the kerf line of the saw blade.

Refer to the instructions supplied with this accessory.

General Operating Tips

- For smooth, clean, chip-free cuts, you **must** use industrial carbide saw blades or router bits that are **sharp**. Dull or improperly sharpened blades or bits will cause chipping, unclean cuts, chatter, and motor overloading. **If you are not sure that a blade or bit is sharp, replace it with a new one.**
- When you feed the material through the tool horizontally, or move the carriage over the material vertically, **do it slowly, smoothly, and (whenever possible) without stopping.** Overfeeding results in poor-quality cuts, shortened blade or bit life, and motor overloading.
- Be careful when setting material onto the rollers. **Do not drop heavy material onto the rollers** or damage to the rollers may result.
- For best results when sawing, place the work piece onto the tool with its backside facing you. This provides the smoothest possible cut on the face side of the panel.
- Panels being cut horizontally or vertically must always be fed against the rotation of the saw blade.
- Panel saws are intended for cutting **large** panels down to size. As the overall panel size becomes smaller and smaller, other types of sawing tools become more convenient and safer to use.
- When routing, whenever possible feed the material horizontally from **right to left** or vertically from **top to bottom**.
- When routing, if most panels are narrow you may wish to elevate the entire tool 12” to 14” (305mm to 356mm) above the floor. This will raise the work area for the narrow pieces to a more comfortable height and still allow you to cross dado full-size panels. You can also achieve this by installing the optional Midway Fence.
- When routing window openings, start the plunge cut in an upper corner. This allows the drop piece to fall downward and away from the bit when the final cut of the opening is completed.
- Refer to the Maintenance section for regular maintenance procedures.

Operating Procedure: Crosscutting

A crosscut is a vertical cut that must always be done from the top to the bottom of a work piece as shown in Figure 24 or 25. (See also “General Operating Tips” above and “Limitations of the Tool”.)

WARNING: To reduce the risk of injury, do not place your hands on or under the carriage or in the path of the saw blade.

1. Position the saw motor in the crosscutting position with the blade oriented vertically. See “Rotating the Turntable”.
2. **For the 7400-Series models only**, adjust the position of the spring-loaded saw foot to the thickness of the material so that it gently presses on the face. Use the two adjusting knobs located above and below the saw motor to adjust the spring loaded saw foot of the panel.
3. Loosen the carriage lock and move the carriage to the top of the guides.
4. Place the work piece on top of the rollers. Be careful not to drop the material on the rollers.
5. Slide the work piece to the desired position, using the crosscut rulers or optional gauging systems (Stop Bar

or Quick Stop) as measures.

6. Make certain that the work piece is adequately supported and stable in the machine. Refer also to "Limitations of the Tool". The work piece can be held with one hand; **do not hold the work piece so that your hand is anywhere behind the carriage or guides or in the path of the saw blade.**
7. Start the motor (see "Starting and Stopping the Motor"), and allow it to reach full speed before beginning the cut.
8. When the motor has reached full speed, slowly and smoothly pull the carriage down so the blade runs through the work piece. Keep one hand on the handle at all times. Be careful not to force the saw through the work piece, to avoid binding. **If the blade binds in the work piece, or the work piece shifts during the cut, stop the motor, carefully move the carriage to the top of the guides, restart the motor, and begin the cut again.**
9. Support and remove the cut-off piece as the saw completes its cut.
10. Once the cut is complete, turn off the motor and wait for the blade to come to a full stop. Move the work pieces away from the blade. Return the carriage to the top of the guides, and lock the carriage rip lock.
11. When making cuts that are less than 1 inch (25.4mm), the chatter guard (located inside the blade guard) must be resting on the work piece, not on the cut-off piece. See Figure 28. If it is not positioned this way, it will jam the work piece and prevent the carriage from continuing through the cut. If the saw jams, turn the tool OFF and wait for the blade to stop. Then back the saw out of the cut.

CAUTION: A coasting saw blade could mar the edge of a freshly cut work piece.

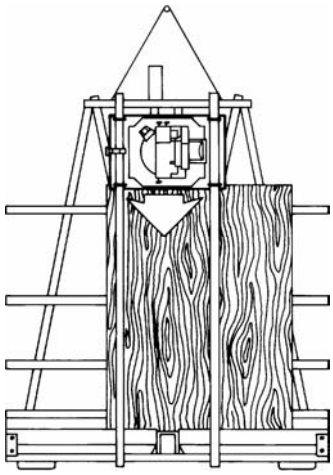

Figure 24: Crosscutting (work supported on at least two rollers)

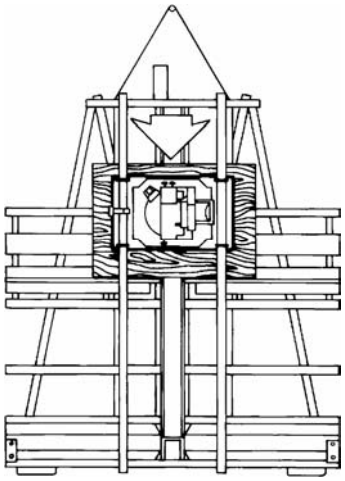

Figure 25: Crosscutting using optional Midway Fence Kit (work extends at least 4" (102mm) beyond saw carriage)

Operating Procedure: Rip cutting

A rip cut is a horizontal cut that can be done either from the left to the right or from the right to the left, as shown in Figure 26 and Figure 27. Rip cuts **must always** be done by moving the work piece in the direction of the arrow on the saw carriage. (See also “General Operating Tips” above and “Limitations of the Tool.”)

WARNING: To reduce the risk of injury, ripping must always be done with the direction of the arrow on the saw.

1. Before you begin, be sure there is enough space on both sides of the saw to completely load the work piece on the saw frame, move it past the saw, and completely off-load it.
2. Select the ripping direction, from right or from left, based on preference. Then rotate the turntable to the ripping position as shown. See “Rotating the Turntable”. The rip measurement is set at the factory for cutting right to left. The measurement indicator will need to be adjusted for left to right.
3. **For the 7400-Series models only**, adjust the position of the spring-loaded saw foot to the thickness of the material so that it gently presses on the face. Use the two adjusting knobs located above and below the saw motor.
4. Select the height of the saw blade above the rollers. Raise or lower the carriage until the height index tab is aligned with the corresponding dimension on the vertically mounted ruler. Lock the carriage securely to the guides in this position.
5. Start the motor (see “Starting and Stopping the Motor”) and allow it to reach full speed before beginning the cut.
6. Position the material on the side of the machine indicated by the arrows on the carriage that show direction of cut. Place the work piece on top of the rollers. Be careful not to drop the material onto the rollers.
7. When the motor has reached full speed, slowly and smoothly push the work piece through the saw, in the direction of the feed arrow on the saw. **Avoid placing your hands, clothing, or body parts under the carriage or in the cutting path of the saw blade. Do not look directly down the line of cut because dust and debris are generated during this operation.**

   Be careful not to force the work piece through the saw, to avoid binding. **If the saw blade binds in the work piece, or the work piece shifts during the cut, stop the saw motor, carefully back the work piece out of the saw, reposition the work piece, restart the motor, and begin the cut again.**
8. As the work piece passes across the machine, move to the other side and complete the cut by pulling the work piece past the saw blade. Support the upper piece to keep it from pinching the blade or the kerf protector, or falling away from the machine.
9. Once the cut is complete, turn off the motor and wait for the blade to come to a full stop. Remove the work pieces from the machine.
10. Rotate the turntable back to the vertical position and return the carriage to the top of the guides. Lock the carriage in this position.

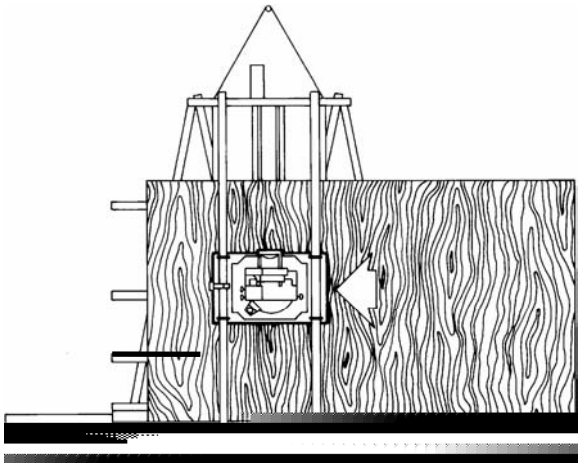

Figure 26: Saw Motor in Rip cutting Position

7. To raise or lower the bit, adjust the graduated depth-adjusting ring on the router base. It indicates the exact distance of the bit below the sub-base.
8. Start the motor (see “Starting and Stopping the Motor”), and allow it to reach full speed before beginning the cut.
9. When the motor has reached full speed, slowly and smoothly pull the carriage so the blade runs through the work piece. Keep one hand on the handle at all times. Be careful not to force the bit through the work piece, to avoid binding.
10. Once the cut is complete, turn off the motor and wait for the bit to come to a full stop. Move the work piece away from the bit. Return the carriage to the top of the guides, and lock the carriage lock.

Switching Between a Saw and Router (Model SR5, SR5U)

To remove the saw and install the router on the Models SR5 or SR5U:

WARNING: Always disconnect the power before interchanging the saw and router.

1. Disconnect the saw power cord. Remove the saw assembly by removing the two thumbscrews at the top of the turntable.
2. Insert the router assembly into the carriage in the same manner and attach it with the two thumbscrews.
3. Attach the adjustable clamp(s) on the frame as shown in Figure 29: insert the L-screw down through the hole in the clamp-mounting bracket and secure with the red knob.
4. If routing on the rollers be sure to use your lower clamps to secure the material.

To remove the router and install the saw:

1. Disconnect the router power cord. Remove the router assembly by removing the two thumbscrews at the top of the turntable.
2. Insert the saw assembly into the carriage in the same manner and attach it with the two thumbscrews.
3. Remove the adjustable clamp(s) from the frame.

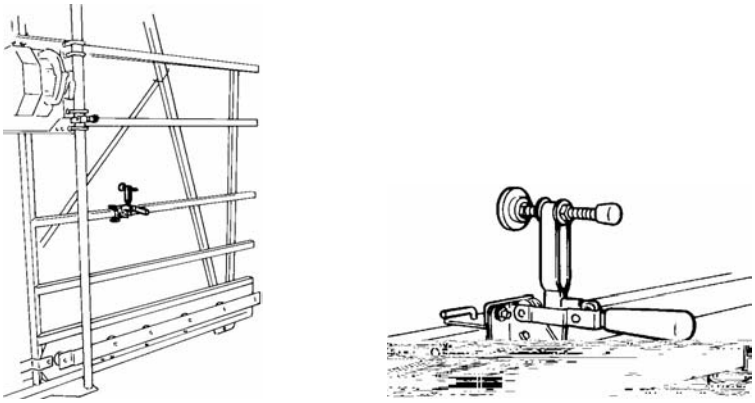

Figure 29: Adjustable Clamp (Routing)

Removing the Motor

Models C4, C5, H4, H5, and H6

To remove the motor from the turntable (see Figure 30):

1. Disconnect and lock off the power supply.
2. Remove the blade guard (Not shown below).
3. Remove the saw blade (Not shown below).
4. Remove the nuts from the two lower hanger bolts (6 and 10).
5. Support the motor by hand, and remove the upper hanger bolt (10) and spacer (9).

To reattach the motor, reverse the above procedure. Use your set screw (11) to reset the motor.

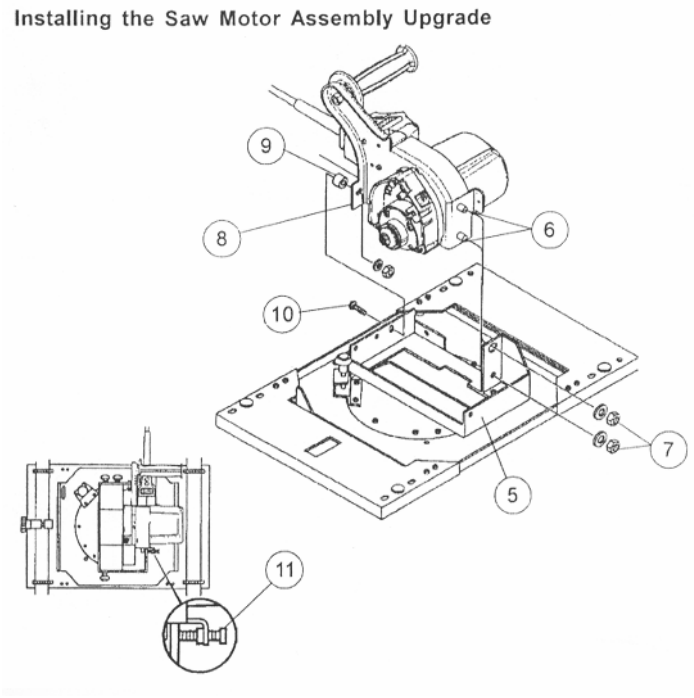

Figure 30: Removing the Motor (Models C4, C5. H4, H5, H6)

Models 6400 and 6800

1. Disconnect and lock off the power supply.
2. Remove the blade guard.
3. Remove the saw blade.
4. Support the motor by hand, and remove the two mounting bolts.

To reattach the motor, reverse the above procedure.

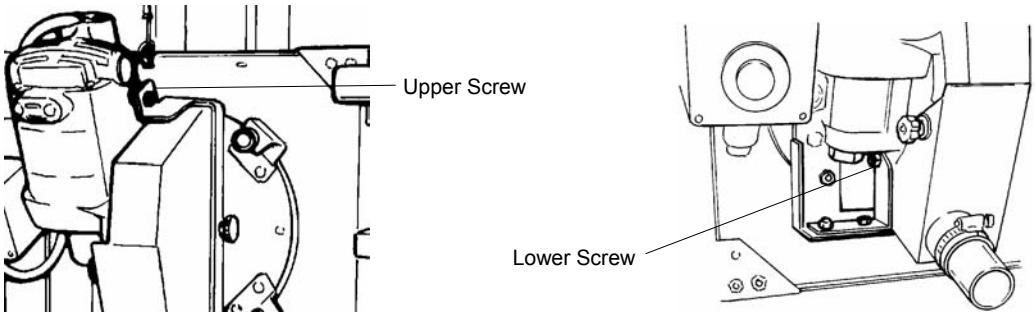

Figure 31: Removing the Motor (Models 6400, 6800)

Models 7400 and 7400XL

1. Disconnect and lock off the power supply.
2. Remove the belt guard.
3. Slip the belt off the pulley.
4. Support the motor by hand, and remove the four mounting bolts.

To reattach the motor, reverse the above procedure.

Routers

1. Disconnect and lock off the power supply.

2. Loosen the wing nut on the router base.
3. Support the motor by hand and rotate it counterclockwise until it comes free of the housing.

To reinstall the motor, reverse the above procedure.

MAINTENANCE

WARNING: To reduce the risk of injury, always unplug the tool before doing any maintenance. Never disassemble the tool or try to do any rewiring to its electrical system. Contact a qualified electrician for electrical repairs. Always follow lockout/tag out procedures when servicing electrical equipment.

General Maintenance

Keep the tool in good repair by adopting a regular maintenance program. Before each day's use, examine the general condition of the tool, and inspect the guards, switches, power cord, and extension cord for damage. Check for loose screws, misalignment, binding of moving parts, improper mounting, broken parts, and any other condition that may affect its safe operation. If abnormal noise or vibration occurs, turn the tool off immediately and have the problem corrected before further use. Do not use a damaged tool. Tag damaged tools "DO NOT USE" until repaired (see "Repairs").

Cleaning

Daily, clean all dust and debris from the vents in the motor housing.

Keep the handles clean, dry and free from oil and grease.

Use only mild soap and a damp cloth to clean the tool, because certain cleaning agents and solvents are harmful to plastics and other insulated parts. Some of these include: gasoline, turpentine, lacquer thinner, paint thinner, chlorinated cleaning solvents, ammonia, and household detergents containing ammonia. Never use flammable or combustible solvents around tools.

WARNING: To reduce the risk of injury, electric shock, and damage to the tool, never immerse the saw or router in liquid or allow a liquid to flow inside it.

Maintaining the Motor

Under normal conditions, motor maintenance is not necessary until the brushes need to be replaced.

Every six months:

- Inspect the brushes, and replace as necessary.
- Mechanically inspect and clean the gears, spindles, bearings, housing, etc.
- Electrically inspect the switch, cord, armature, etc.
- Test to assure proper mechanical and electrical operation.

Lubricating the Guides

The carriage should move smoothly up and down the guide tubes or rails. However, if the guides become caked with dust or debris, the carriage may get stuck or it may not slide smoothly. Periodically clean the guides with a damp cloth, following the directions under "Cleaning" above. Then use a dry lubricant such as a spray silicone. Other lubricants cause dust and debris to collect on the guides and contaminate the bearings.

SERVICE

Repairs

If your tool is damaged, call Safety Speed Cut at 800-772-2327 for technical advice or for the name of a dealer near you who can service your machine.

Replacement Parts

Refer to the separate replacement parts information provided with the tool.

Alignment

The tool is aligned at the factory to a tolerance of:

- ±1/32” (.8mm), on Models C4, C5, H4, H5, and H6
- ±1/64” (.4mm), on Models 3400, 6400, 6800, TR2, SR5, and SR5U
- ±.005” (13mm), on Models 7400 and 7400XL.

It needs realignment only if mishandled or abused, or if the motor or a roller is replaced.

Alignment consists of four steps that must be done in the following order (these steps are explained in detail below):

1. Adjust the blade or bit so it is parallel with the guides.
2. Adjust the blade or bit so it will be perpendicular to the work piece.
3. Adjust the guides so they are perpendicular to the rollers.
4. Align the rollers.

Constructing an Alignment Tool

For maximum accuracy, construct a test square to check the full movement of the saw.

See Figure. Construct the square using a 6-ft (1.83m) metal ruler and two 4-ft (1.22m) metal rulers. (Using the 3’ (.91m), 4’ (1.22m), and 5’ (1.5m) measurements assures squareness.) Drill holes and attach the rulers with pop rivets or small nuts and bolts.

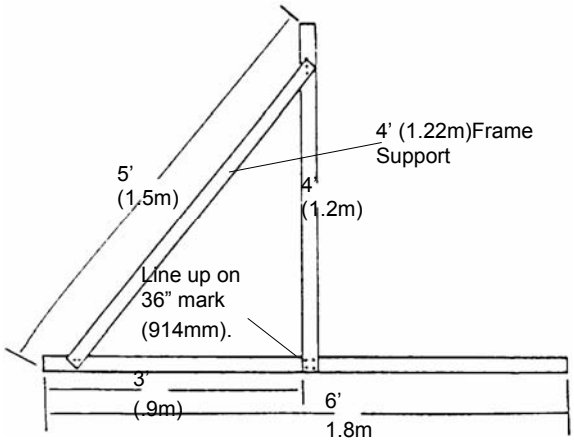

Figure 32: Field Alignment Tool

Use the 6-ft (1.83m) ruler to check squareness of the rollers. Use the 4-ft (1.22m) ruler to check squareness of the guide tubes or rails. The tool also can be used as a giant square for layouts.

Step 1: Adjust the Blade Parallel to the Guides (Saws Only)

The blade must move parallel to the guides, or tail burning may occur and the kerf will be wider than the set of the blade. Make the following adjustment only if the blade appears to be out of alignment.

To check the blade parallelism:

1. Align the rollers and adjust the guides (see Steps 3 and 4 below).
2. If the blade "heels", or leaves burn marks on the cut, position the carriage for a crosscut and make a sample cut. Check both sides of the cut to determine which side of the blade is causing the problem (you will need this information for adjusting the blade).

To adjust the blade parallelism:

1. **Unplug the tool.**
2. Position the Adjustment Tool on the rollers. Lower the carriage so the Adjustment Tool overhangs the blade.
3. Place the Adjustment Tool against the blade. The entire face of the blade should contact the Adjustment Tool. If it does not, then the blade is not parallel to the work piece and you should:
   a. Loosen (but do not remove) the two hex-head nuts holding the indexing pin assembly (Figure 33, #24).
   b. If burn marks appear on the **left side** of the work piece, rotate the saw slightly clockwise until the entire face of the blade contacts the Adjustment Tool.

   If burn marks appear on the **right side** of the work piece, rotate the saw slightly counterclockwise until the entire face of the blade contacts the Adjustment Tool.

   Make only a slight adjustment at a time.
4. Securely tighten the two hex nuts holding the index pin assembly or assemblies.
5. Make a sample cut and adjust if necessary.

Step 2: Adjust the Blade or Bit (Perpendicularity)

To adjust for perpendicularity:

1. If the tool does not cut at 90° to the surface of the work piece, loosen the two motor mount nuts (Figure 33, #25). An adjusting screw (26) is located to the right of the lower nuts.
2. Loosen the adjusting screw lock nut. Tighten or loosen the adjustment screw depending on the angle adjustment required. Make only a slight adjustment.
3. Retighten the lock nut; making sure the screw is against the plate.
4. Retighten the motor mount nuts. Make a sample cut and readjust if necessary.

For perpendicular cuts, be sure the saw motor is against the factory-set adjustment screw (26).

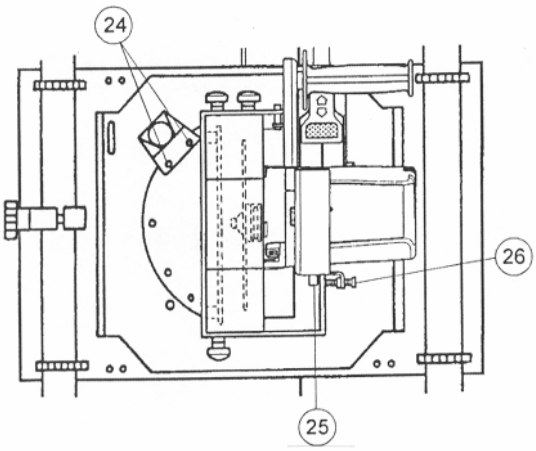

Figure 33: Adjusting the Blade (Perpendicularity)

Step 3: Align the Guides

WARNING: Unplug the tool before beginning this adjustment.

If the tool does not cut at 90°, the guides may not be perpendicular to the rollers.

To check the guide alignment:

1. **Unplug the tool** before testing alignment or making adjustments.
2. Align the rollers (see Step 4 below).
3. Remove the blade guard to expose the blade. Mark a tooth to use as a reference. If you are using a high-speed steel blade, mark a tooth that points toward the edge of the Alignment Tool (described above).
4. Clamp the Alignment Tool to the roller assembly.
5. Pull the carriage down slowly until the marked reference tooth just touches the vertical edge of the Alignment Tool. Continue to pull the carriage down: if the blade does not contact the square, or if the blade binds on the square, the guides are not aligned.

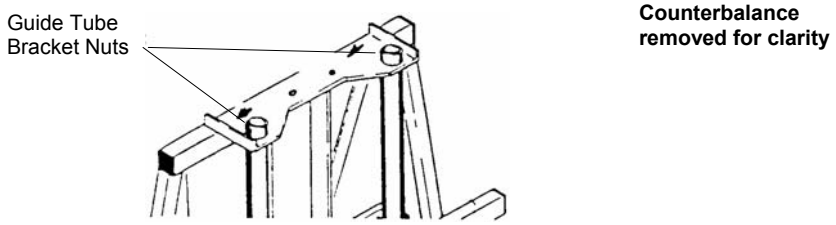

Figure 34: Aligning the Guide Tubes

To align the guides:

1. Loosen the guide bracket nuts (Figure 34), but **do not remove** the bracket. Using a dead blow mallet, strike the bracket on the side and in the direction you wish the guides to go. **Do not strike the guides**.
2. Recheck the squareness of the guides to the rollers, using the procedure outlined above. Readjust if necessary.
3. Securely retighten the guide bracket nuts.

Step 4: Align the Rollers

NOTE: This step is not applicable to the Model TR2.

To check the roller alignment:

1. Remove any Frame Extensions (reattach them after completing all alignment steps).
2. Remove or retract the Frame Stand, if used. Lay the tool flat so the roller nuts are easily accessible. With proper care, you can place the tool on a table with the guides up.
3. The two outermost rollers are fixed, so adjust all other rollers to them. Lay the 6-ft edge of the Alignment Tool (see above) across the rollers to verify alignment: all rollers should contact the edge. If a roller is “high” or “low” to the edge of the Alignment Tool, align the rollers according the instructions below.

To align the rollers:

1. Clamp a straightedge (at least 5-ft (1.5m) long) to the top of the rollers so that it lies flat on the frame and against the outermost rollers. Position the clamps above the outermost roller.
2. With the straightedge securely clamped, rotate each roller to be sure that it neither jams nor has excessive clearance from the straightedge. If a roller runs “tight” or “loose” to the straightedge, loosen the roller nut. The roller nuts are torqued and require at least an 18-in (458mm). breaker bar to loosen them.
3. All the rollers except the outermost are mounted on an eccentric center hub. Turning a roller when the roller nut is loose will change the position of the roller. You may have to lift the front roller carriage bar to rotate the eccentric hub. Turn the roller until it contacts the straightedge, being careful not to bend or bow the straightedge when repositioning the roller.
4. Tighten the roller nut securely; making sure the roller does not change position.
5. Repeat this process as needed for any remaining rollers. **NOTE:** After replacing an **outside** roller, repeat Step 2 as needed. Reposition the Frame Stand.

ACCESSORIES

Safety Speed Cut offers several accessories for our panel saws and routers.

Frame Wheels

The Frame Wheels Accessory allows the tool to be rolled from one location to another in the shop. It includes two wheels and mounting fasteners.

Wheels are standard on the Models 7400 and 7400XL, and are not available for the Model TR2.

Installation

Bolt one wheel to each end of the frame as shown in Figure 35.

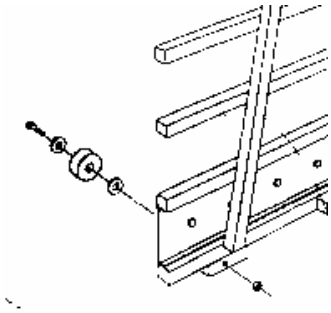

Figure 35: Installing the Wheels Accessory (viewed from rear of frame)

Frame Stand

The Frame Stand Accessory allows the tool to be freestanding in the shop. It includes two long angle-steel supports that attach to the top of the frame, one strap that attaches to the bottom of the frame, and U-bolts or other fasteners for mounting them. Slightly different Stands are required for each frame model.

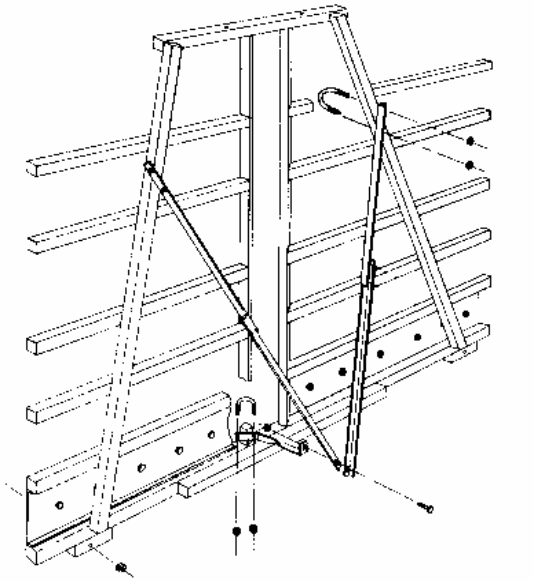

Figure36: Installing the Frame Stand, Model H4 or H5 (Model H5 shown, viewed from rear of frame)

Stands are standard on the Models 7400 and 7400XL. They are not available for the Model TR2. The Model C4 and C5 also have an optional retractable stand that can be folded for fast transport of the tool.

Installation

Attach the components as shown in Figure 36 or 37.

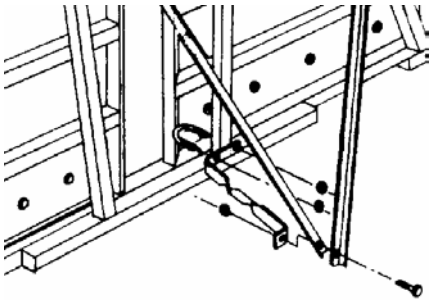

Figure 37: Installing the Frame Stand, Models H-6 and 6400 (Model 6400 shown)

Frame Extensions

The Frame Extensions Accessory adds 20”(509mm) to each end of the tool frame. It includes two extensions and the necessary fasteners.

Extensions are recommended for cutting 4x8-ft (1.2m x 2.4m) sheets on the Model C4 and C5, and for cutting panels longer than 10 ft (3m) on larger tools. They are not available for the Models 7400, 7400XL, or TR2.

Installation

Attach the extensions to the back of the frame as shown in Figure 38. It is not necessary to remove any parts from your existing machine to install the extensions.

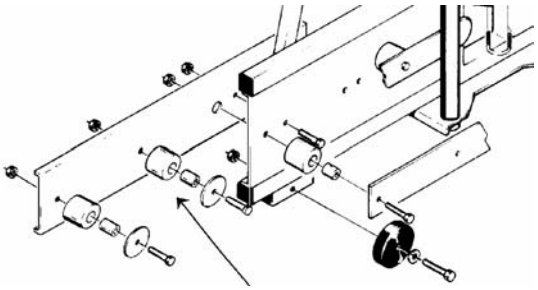

Figure 38: Installing the Frame Extensions (viewed from rear of frame)

Dust Collection Kits

Dust Collection Kits are recommended if the tool will be used in an enclosed area. They include discharge tubing and a hose roller system to hold the outboard end of the tubing. For saws, the kits also include new blade guards that have a 2” (50.8mm) hose connection.

Dust collection components (not including a vacuum source) are standard on the Models 7400 and 7400XL.

The dust hose must be attached to an SSC Vacuum or to any high-pressure vacuum source that provides at least 90” to 110” of static pressure and 100 CFM.

CE certified machines come standard with the hose connection on the blade guard.

Installation

Refer to Figure 39.

CAUTION: Before beginning installation, disconnect the power supply to the motor, raise the carriage to the top of the guides, and lock the carriage in place with the lock knob.

CAUTION: Be sure the tool frame is securely supported and cannot be tipped over during this installation procedure. An additional person should support and stabilize the frame at all times during the installation.

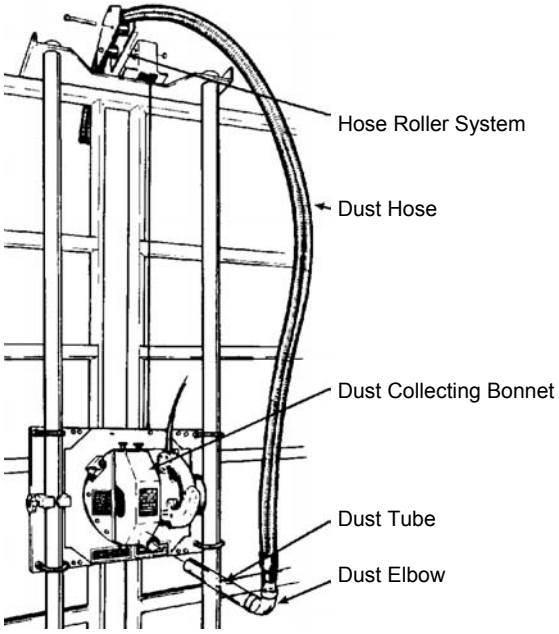

Figure 39: Installing the Dust Collection Kit on a Saw

1. On saws, remove the blade guard and replace it with the new guard that has a 2" (50.8mm) steel tube connector.
2. Insert the clear plastic inner tube into the blade guard, and align the tube's slot with the inner tab. Slide the tube further in (the slot will fit around the blade), until it is as close to the work piece as possible. Tighten the clamp to hold the inner tube in place.
3. Mount the hose rollers to the top of the frame.
4. Lay the $1^1/_2$" (40.6mm) black flexible vacuum hose across the rollers, with one end to the front of the frame and one end to the back of the frame.
5. Connect the hose end that is toward the back of the frame to the vacuum (see above specifications).
6. Connect the hose end that is toward the front of the frame to the narrow end of the steel tube elbow.
7. Connect the tapered end of the steel tube elbow to the outside of the plastic dust tube.

Operation

Always turn the vacuum source on before starting the saw or router, and turn it off when finished cutting.

Stop Bar

The Stop Bar Accessory fits between the lower pair of horizontal frame members. It provides preset flip stops for repetitive cuts. Six or eight flip stops are included (depending on the model), and additional stops can be added.

This option is not available for the Model C4, C5 or TR2.

Installation

CAUTION: Before beginning installation, disconnect the power supply to the motor, raise the carriage to the top of the guides, and lock the carriage in place with the lock knob.

CAUTION: Be sure the tool frame is securely supported and cannot be tipped over during this installation procedure. An additional person should support and stabilize the frame at all times during the installation.

1. Position the stop bar in the bottom left side of the frame as shown in Figure 40, resting against the bottom horizontal arm and the vertical back supports.

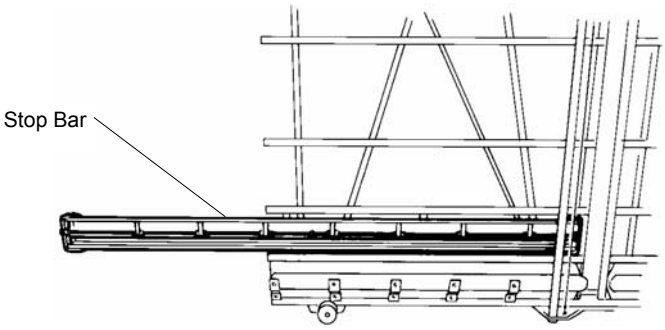

Figure 40: Installing the Stop Bar

2. Working from the front of the tool, attach the three angle supports (Figure 41) to the back of the Stop Bar, using six 5/16 x 3/4" (7.9mm x 19.05mm) hex-head cap screws and nuts. Tighten the nuts securely.

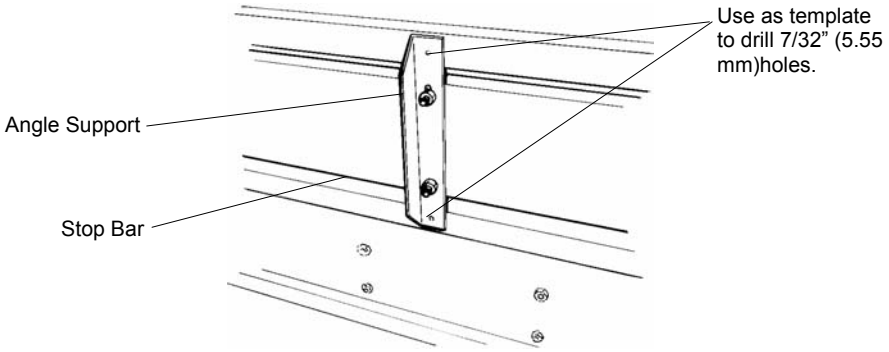

Figure 41: Installing the Stop Bar (viewed from the rear)

3. Push the stop bar housing as far toward the center of the tool as possible.
4. Working from the back of the machine, use the angle supports as templates to drill six 7/32" (5.55mm) holes (two per bracket) in the horizontal tubes of the frame.
5. Insert and tighten six self-tapping ¼(6.35mm)-20 hex-head screws to secure the angle support brackets to the frame tubes.
6. Measure out from the blade or bit, and adjust the stop bar ruler by sliding it left or right inside its aluminum extension.

Operation

Set the individual flip stops to the positions desired for repetitive cuts: loosen the collars with the provided Allen wrench, slide the collars to the desired position, and retighten them.

Multiple cuts can be made by flipping the stops up or down to position the work piece at the proper distance from the blade or bit. When setting multiple stops, remember to account for the material lost to the blade kerf.

Quick Stop

The Quick Stop Accessory provides an easy method of setting an exact repeatable cut length for crosscuts and vertical routing cuts. It consists of an aluminum angle extrusion with movable tape measure, a large aluminum stop block with threaded lock knob, and mounting brackets and screws. The Quick Stop can be attached to any horizontal frame member, on any model saw. Standard Quick Stops are factory-drilled to mount on the left side of the frame; right-hand Quick Stops are available by special order.

It is standard on the Models 7400 and 7400XL, and is not available for the Model TR2.

Installation

CAUTION: Before beginning installation, disconnect the power supply to the motor, raise the carriage to the top of the guides, and lock the carriage in place with the lock knob.

CAUTION: Be sure the tool frame is securely supported and cannot be tipped over during this installation procedure. An additional person should support and stabilize the frame at all times during the installation.

1. Attach the two mounting brackets to the long aluminum angle bar of the Quick Stop as shown in Figure 42, using the screws provided.

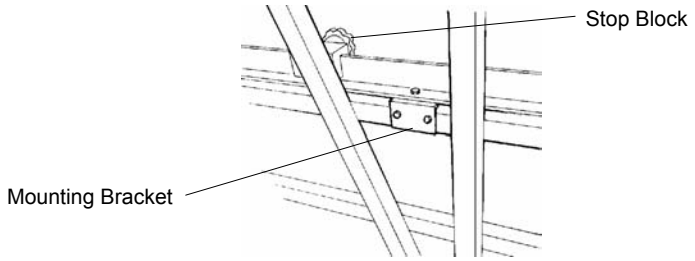

Figure 42: Installing the Quick Stop (viewed from rear of frame)

2. Set the assembled angle bar on the next-to-lowest horizontal bar on the left side (as you are looking at the frame in Figure). You will cover the standard ruler on the machine when you install this accessory.

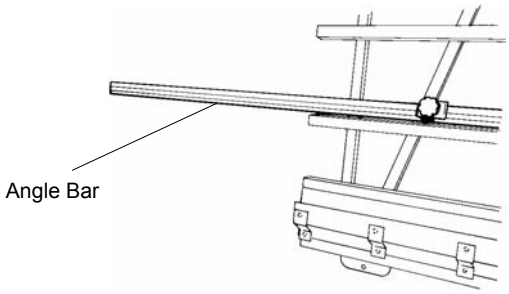

Figure 43: Installing the Quick Stop

3. Push the Quick Stop as far toward the center of the tool as possible.
4. Using the mounting bracket holes as a template, drill four 7/32" (5.55mm) holes in the tool frame.
5. Attach the brackets to the frame, using four ¼(6.35mm)-20 self-tapping hex-head screws.
6. Measure from the blade or bit, and adjust the Quick Stop measuring tape by sliding it in the angle extrusion.

Operation

1. Position the stop block at the desired cut length, as shown by the Quick Stop measuring tape, and secure the block with the lock knob.
2. Raise the carriage to the top of the guides.
3. Slide the work piece behind the carriage, and hold it firmly against the stop block. **Never reach behind the carriage!**
4. Cut the work piece with a smooth, continuous down stroke of the carriage.

Midway Fence

The Midway Fence Accessory is a removable horizontal work piece support that mounts halfway up the tool frame. It allows narrow work pieces to be worked at waist height. The fence consists of left and right fixed brackets that mount to the frame, and removable supports for each side. The accessory contains the components shown in Figure 44.

The Midway Fence is optional on the Models C4, C5, H-Series, 6400, 6800, and 3400. It is standard on the Models SR5, SR5U, 7400, and 7400XL, and is not available for the Model TR-2.

Installation

NOTE: All hex nuts furnished with this accessory are **lock** nuts. During pre-assembly, **do not** completely tighten these nuts.

1. Lay out the parts shown in Figure 44 on a horizontal surface (table or bench) for pre-assembly. Note that one end of each fence extrusion is cut at a 45° angle. The units should be pre-assembled so that these beveled ends will fit against the center of the tool frame at final assembly.

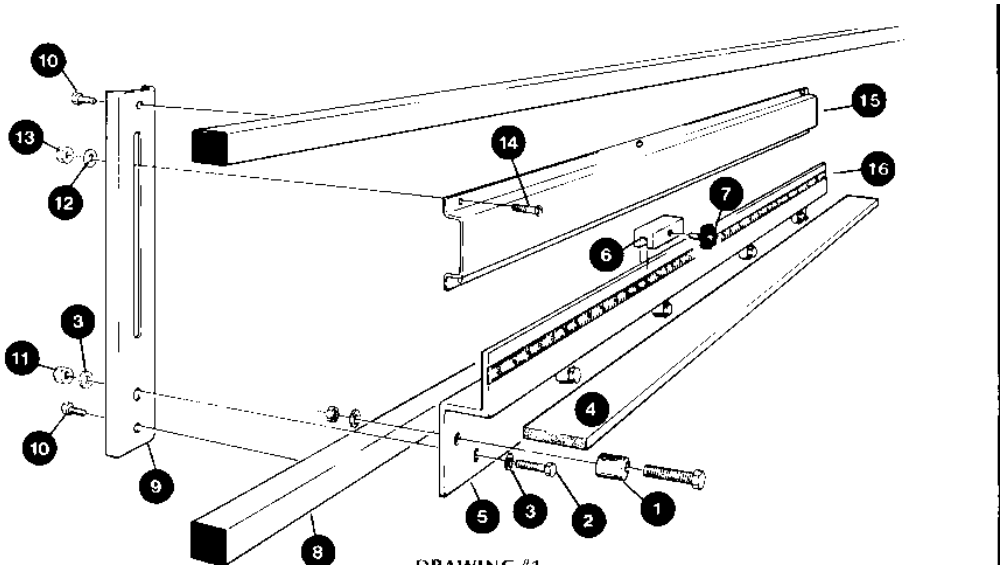

Figure 44: Pre-assembly of Midway Fence

2. Set the complete right-hand fence assembly onto the tool frame as shown in Figure 45.

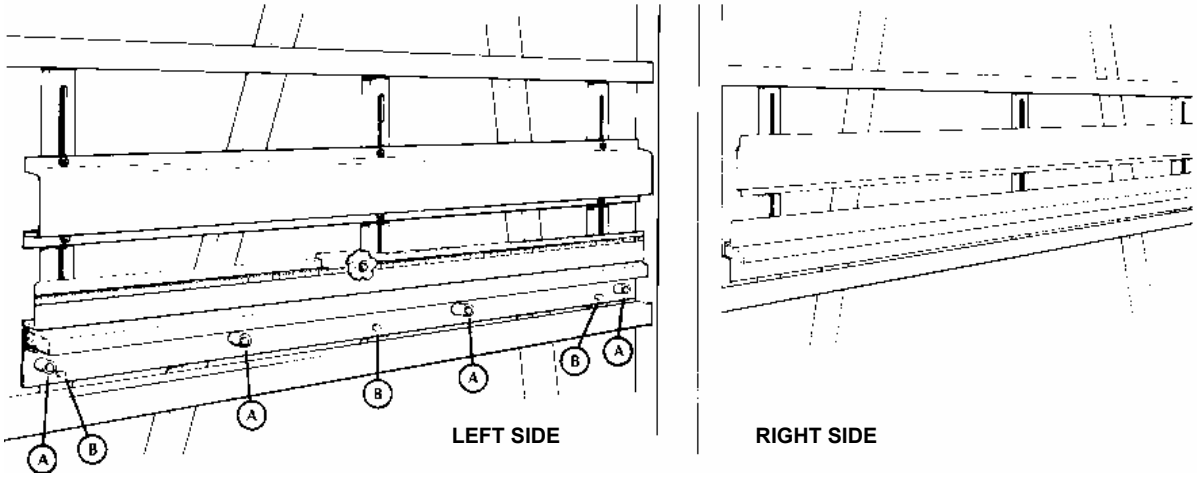

Figure 45: Mounting the Midway Fence

3. Tip the top of the rear support brackets (#9 in Figure 44) under the **upper** horizontal frame member (#8), raise the fence, and push the lower ends of the rear support brackets down behind the **lower** horizontal frame member. The nuts may have to be loosened slightly to perform this step.
4. Tap the entire fence system toward the center of the tool frame, and align (as closely as possible) the 45° angle of the aluminum extrusion (#5) with the 45° angle of the vertical tube at the center of the frame. To assure a neat appearance, be sure the rear support brackets (#9) are flush top and bottom with the machine frame tubes, and that they are at a 90° angle to the horizontal machine frame tubes.

5. Double-check the position of the complete fence assembly. Using the holes in the rear support brackets as a template, drill six 7/16" (11.11mm)mounting holes in the machine horizontal frame tubes, and secure with six self-tapping screws.
6. Repeat Steps 2 through 5 on the left-hand side of the frame.
7. Mount the wooden fence sections (#4), with the 45° angle ends toward the center of the machine, between the aluminum extrusion sections and the cam-type spacers (#1). When not in use, the two wooden fence sections can be stored in the material support channels (#15) on each side.
8. The friction fit of the wooden fence sections between the aluminum support bracket and the cam-type spacers can be adjusted by turning the bolt heads with a wrench. This fit can be readjusted at any time without realigning the fence system.
9. Align the fence system (see below).

Fence Alignment

1. Disconnect the power supply to the tool.
2. Remove the blade guard.
3. Slightly loosen the bolts that secure the aluminum extrusion (#5, Fig. 44) to the rear support brackets (#9), to allow the extrusion to be moved up or down by tapping it with a mallet.
4. Tap the extrusion to align it evenly, 1/4" (6.35mm) above the **lower** horizontal frame member (#8).
5. Place a carpenter's square on the wood fence, with the longer side on the fence and the shorter side against the saw blade. Raise and lower the carriage to check if the saw blade maintains alignment with the edge of the square. Gently tap the **outside** edge of the fence system to bring the wooden fence and the carpenter's square into alignment with the saw blade travel.
6. Reinstall the blade guard and reconnect the power supply.
7. Using a sample panel approximately 18" (458mm) wide and 40" (1,016mm) long, and a freshly sharpened saw blade, trim 1" (25.4mm) off the end of the panel.
8. Remove the panel from the fence. Turn it around, **keeping the same edge down**. Trim 1" (25.4mm) off the other end.
9. Measure the top and bottom of the piece. When the measurements are the same, or within the tolerance of the machine, tighten all securing bolts.
10. To align the left half of the fence, place a 6-ft (1.8m) or 8-ft (2.4m) straightedge on the right-hand fence. Move it to the left until it extends the full length of the left wooden fence (48"or 1,219mm). Clamp the straightedge to the frame of the machine. Carefully adjust the left aluminum extrusion until the top of the wooden fence gently touches the bottom of the straightedge along its entire surface. Retighten all securing bolts.

To adjust the rulers, measure out from the saw blade and place a vertical pencil mark at 24" (610mm). Place both thumbs on the face of the ruler, and slide the ruler to the right or left to the proper location. Test-cut a piece of scrap material to check the ruler position.

Hold-Down Bar

The Hold-Down Bar Accessory consists of a vertical tube and several spring hold-down arms that help hold any thin, flexible material for chip-free, accurate cutting. It accepts material up to 3/4 in. (19mm) thick, and can be quickly removed without wrenches for cutting thicker material.

A Hold-Down Bar is standard on the Models 7400 and 7400XL.

Installation

1. Attach the top and bottom support brackets (Figure 46) with four 5/16" x 3/4" (7.9mm x 19.05mm) cap screws and nuts. The top bracket is marked "T" and the bottom bracket is marked "B".
2. Insert the round vertical tube up through the top bracket and then lower it down through the bottom bracket. A small hex-head screw at the bottom of the tube prevents you from inserting it the wrong way.
3. Attach the top and bottom tension locks as shown in Figure 46.

4. Attach the spring hold-down arms with 1/4” (6.35mm) hex-head T.C. screws and washers.

5. Turn the vertical tube until the spring arms touch the tool frame and then tighten the top and bottom tension locks.

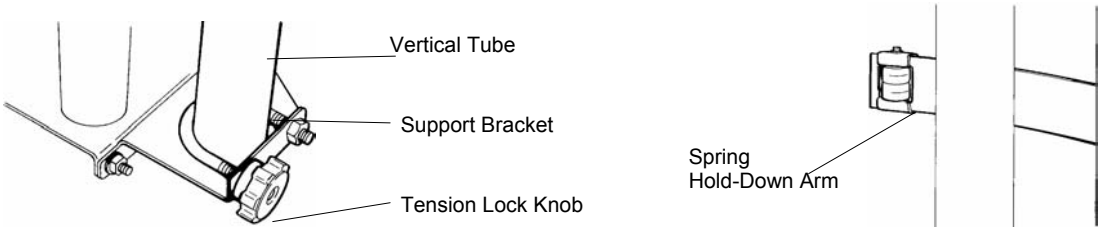

Figure 46: Installing the Hold-Down Bar

Air Clamping Package (for routers)

The Air Clamp Accessory replaces the manually operated clamps. It is not available for the Model SR5 or SR5U.

Installation

Install as shown in Figure 47.

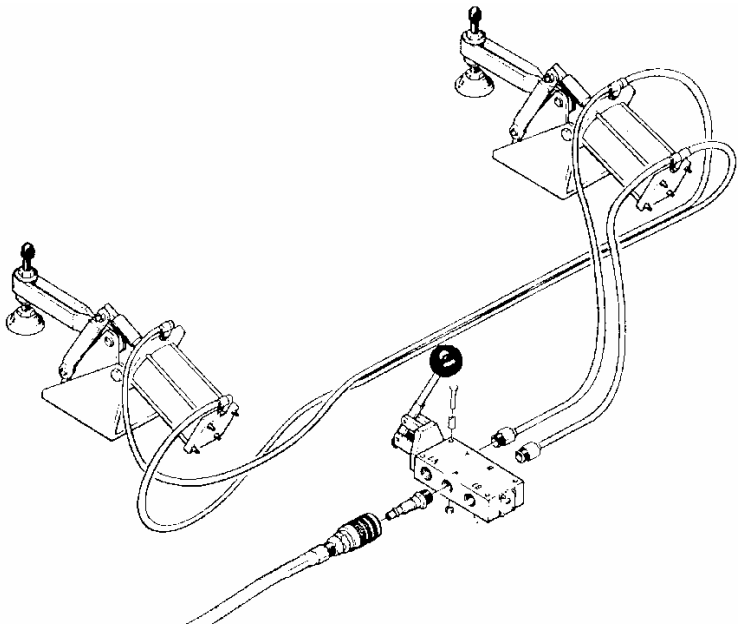

Figure 47: Air Clamping Package (for models 3400 and TR2)

Carbide Knife Scoring System (Models 7400 and 7400XL)

The Carbide Knife Scoring System provides two score marks on the surface of a coated particleboard panel, directly in line with the kerf width of the main saw blade. The knives can be adjusted for width of score and depth of cut. The accessory can only be installed on 7400-Series saws.

Installation and Operation

Refer to the instructions packed with the accessory.

SPECIFICATIONS

TableIV: Saw and Router Specifications

Tool Model	Dimensions				Maximum Crosscut	Cut Thickness	Volts AC	Horse Power
	Length	Height	Depth	Weight				
C4	60”/1525mm	75”/1900mm	14”/356mm	189lbs/86kg	50”/1270mm	1.75”/45mm	120	3.25
C5	60”/1525mm	90”/2286mm	14”/356mm	219lbs/99kg	64”/1625mm	1.75”/45mm	120	3.25
H4	120”/3050mm	75”/1900mm	14”/356mm	244lbs/111kg	50”/1270mm	1.75”/45mm	120	3.25
H5	120”/3050mm	90”/2286mm	14”/356mm	298lbs/135kg	64”/1625mm	1.75”/45mm	120	3.25
H6	120”/3050mm	98”/2500mm	14”/356mm	359lbs/163kg	74”/1850mm	1.75”/45mm	120	3.25
6400	120”/3050mm	90”/2286mm	14”/356mm	598lbs/271kg	64”/1625mm	1.75”/45mm	120	3.00
6800	120”/3050mm	98”/2500mm	14”/356mm	660lbs/299kg	74”/1850mm	1.75”/45mm	120	3.00
7400*	120”/3050mm	96”/2440mm	46”/1170mm	950lbs/431kg	64”/1625mm	2 1/8”/55mm	220, 1~	2.00
7400XL*	156”/5118mm	96”/2440mm	46”/1170mm	1050lbs/476kg	64”/1625mm	2 1/8”/55mm	220, 1~	2.00
SR5	120”/3050mm	90”/2286mm	14”/356mm	320lbs/145kg	62”/1575mm	1.75”/45mm	120	3.25/1.75
SR5U	120”/3050mm	90”/2286mm	14”/356mm	550lbs/250kg	62”/1575mm	1.75”/45mm	120	3.00/3.25
3400	120”/3050mm	90”/2286mm	14”/356mm	660lbs/299kg	62”/1575mm	1.75”/45mm	120	3.25
TR2	97”/2460mm	45”/1145mm	57”/1448mm	285lbs/129kg	36”/910mm	1.75”/45mm	120	3.25

* Also available with 240V, 3 hp, 3-phase motor
All other models are also available in 220/240V, 50/60 hertz.

Warning Labels Identified

Do Not Use This Tool Where Children Are Present

Do Not Remove Blade Guard With Power Connected
Do Not Use Without Blade Guard On Machine

Read Manual Before Operating Saw

Feed Stock In The Direction Of The Arrow

Read Instructions To Reduce Risk Of Kickback

Do Not Place Hands Under Saw Carriage Or Near Blade

Keep Hands Clear Of Area To Reduce Risk Of Pinching

Disconnect Power Before Changing Motor

Do Not Place Hands Under Saw Carriage Or Near Blade

Do Not Operate In Wet Conditions

Install Blade In Direction Of Arrow