Abbeon Cal, Inc.
Industrial Plastic Working Equipment & Precision Instruments

Abbeon Cal, Inc.,
1363 Donlon Street Unit 1, Ventura, CA 93003-8387
800-922-0977 www.Abbeon.com
E-mail: abbeoncal@abbeon.com

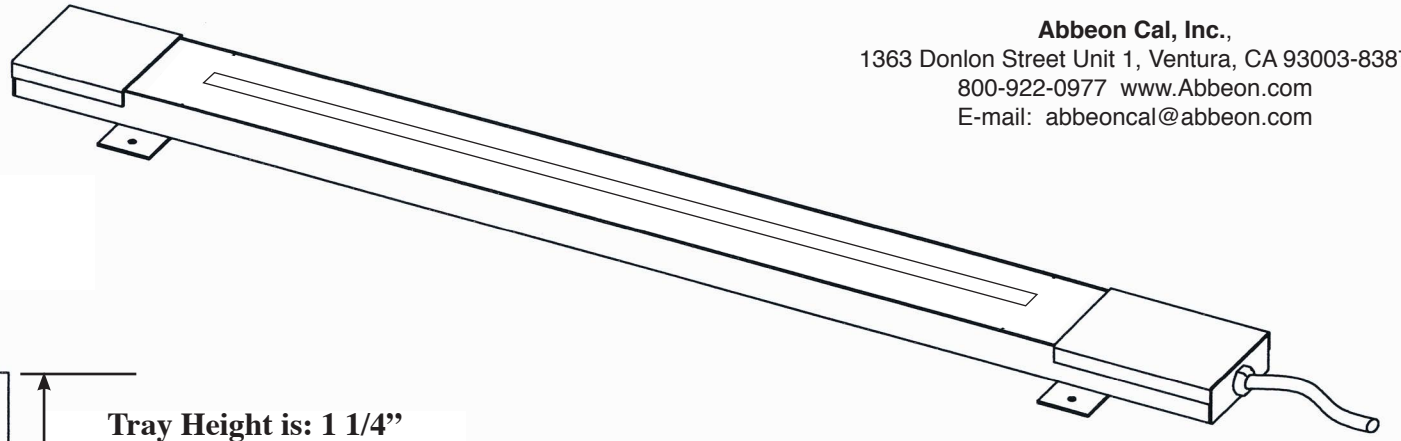

End View

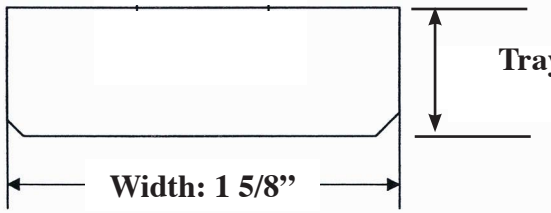

Top View

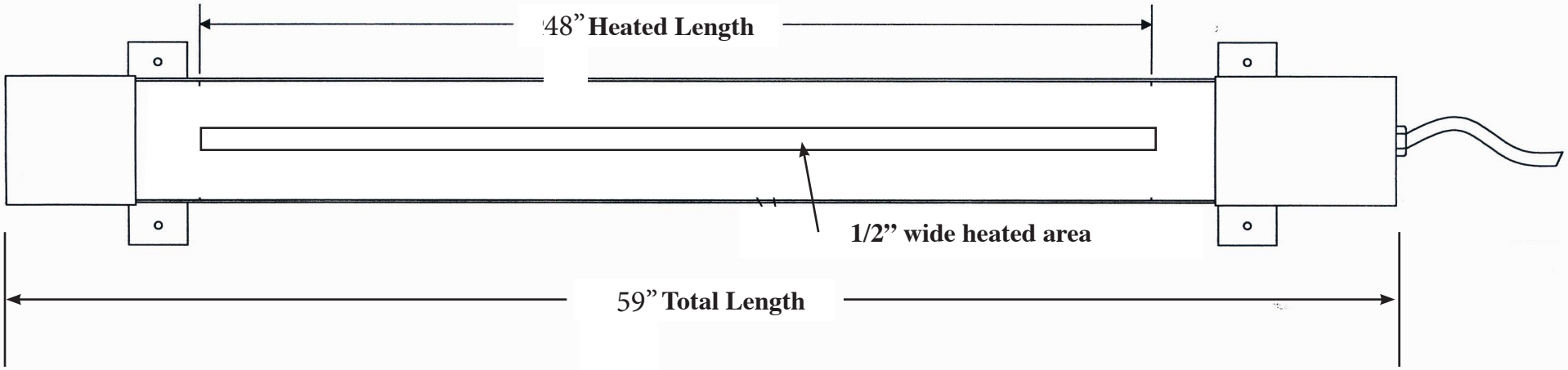

PROPRIETARY AND CONFIDENTIAL	UNLESS OTHERWISE SPECIFIED:		NAME	DATE	TITLE: FS48, Watts 430, Amps 3.6
	DIMENSIONS ARE IN INCHES	DRAWN	NLL	09-17-07	
	MATERIAL:	CHECKED			SIZE / DWG. NO. 001 / REV 0
	FINISH:	COMMENTS:			
	DO NOT SCALE DRAWING				SCALE: Not to scale / SHEET 1 OF 1

5 4 3 2 1